PROLYTE STRUCTURES

PROLYTE SYSTEMS

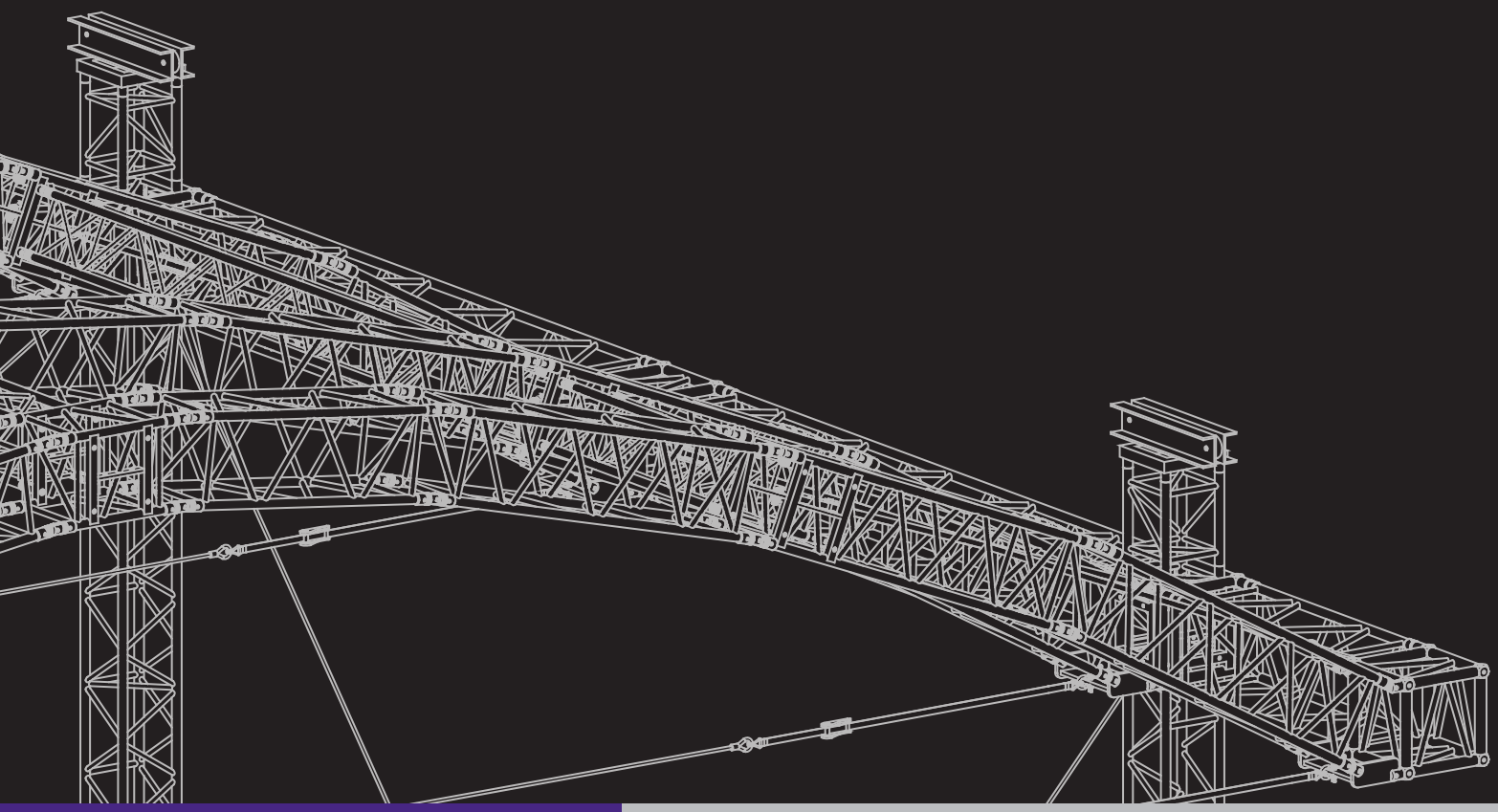

PROLYTE STRUCTURES | Trussing Towers

PROLYTE SYSTEMS | Rigging Towers Roof Systems

ProlyteStructures and ProlyteSystems are Prolyte Group brands

PROLYTE GROUP

PROLYTE GROUP

Helping you build great things

As world leading manufacturer of hardware products and structural solutions for the entertainment industry Prolyte Group is passionate about offering the best solutions for its users and customers. Making the basic building blocks of its industry performances, like trussing, staging and electrical hoists, Prolyte endeavours for product excellence and continuous product innovation. By actively engaging in raising the level of knowledge and by providing solutions that work in daily practice, Prolyte looks to support the creativity of designers on the one hand and the safety of technicians on the other.

By committing to provide a high level of expertise and professionalism along with a friendly and uncomplicated approach Prolyte offers unrivalled products and services, which is why users and customers choose to work with Prolyte.
By prioritising mutual respect and trust, Prolyte creates long-term relations with both its users and customers.

When this is all coming together Prolyte is your first step to start building great things. Prolyte Group is headquartered in Leek, the Netherlands, where the complex process of design, engineering and sales come together.Prolyte has a manufacturing base in Slatina, Romania and a strategically positioned warehouse in Emsdetten, Germany, to provide stock and logistic facilities in the heart of mainland Europe.

Completing the team effort is a network of distribution partners; Prolyte distributes products to over 50 geographical markets worldwide. It utilises its network of partners who not only supply but also endorse its products with impeccable customer service and outstanding technical support, enforcing Prolyte's reputation as a market leader for quality, safety and customer satisfaction.

You can find Prolyte products in installations, events and productions all over the world.

PROLYTE
STRUCTURES

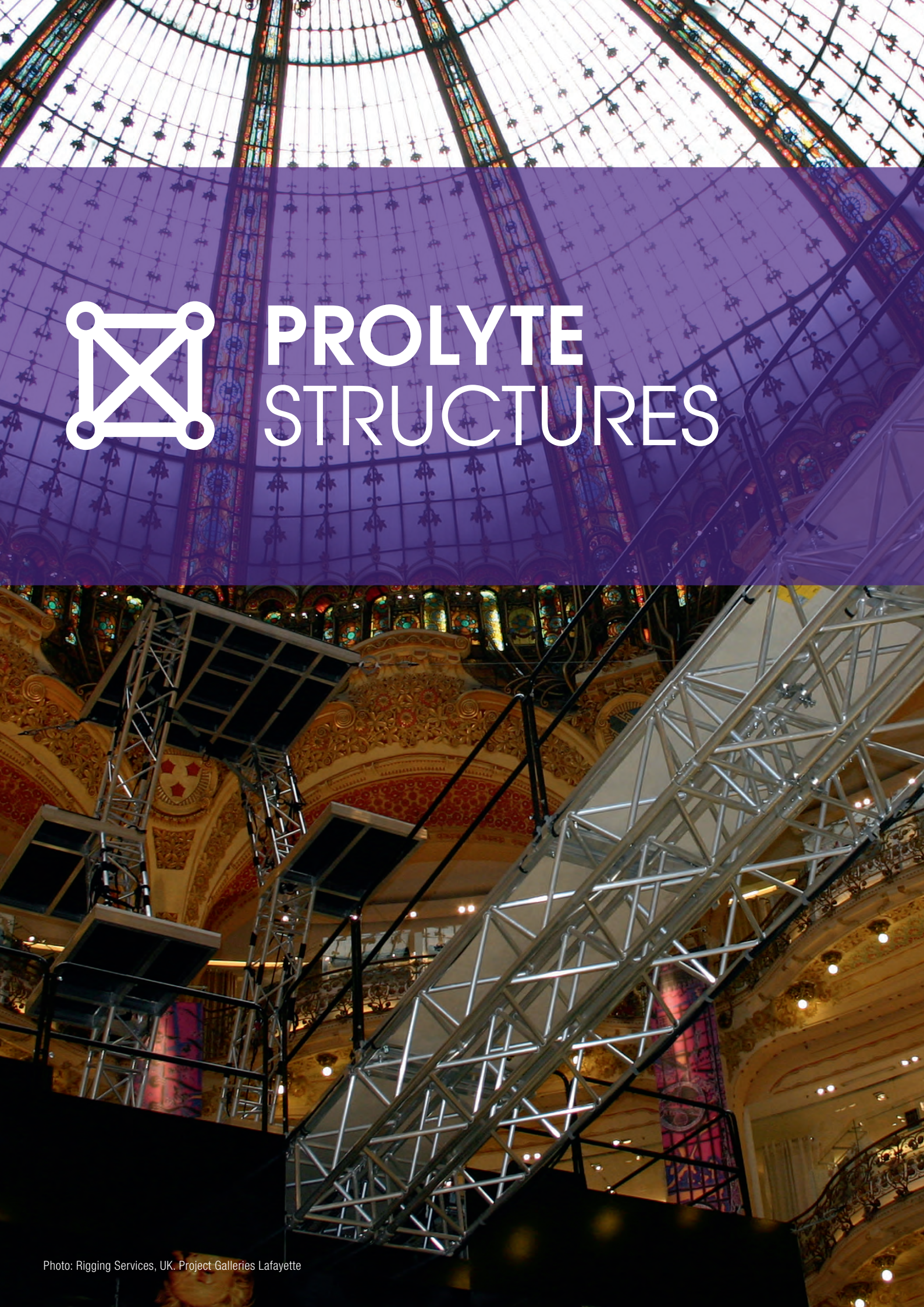

Photo: Rigging Services, UK. Project Galleries Lafayette

Contents

Photo: © the Prolyte Group.

PROLYTE STRUCTURES

ProlyteStructures

Truss products are the building blocks of our industry. Prolyte has developed a broad range of trusses and the unique conical coupling system, CCS, suitable for a variety of applications from decorative solutions to intricate truss structures.

ProlyteStructures is capable of meeting all your truss needs, from a simple flown grid or exhibition booth to elaborate or composite structures prepared for high loading.

Safety first

ProlyteStructures encompasses trusses and complementary corners and accessories; all designed and manufactured according to a strict philosophy that emphasizes safety by making high quality products in compliance with the strictest regulations and standards.

Next to that, simplicity, ease-of-use and configuration flexibility guarantee user-friendly products designed for daily practice. Prolyte provides comprehensive data and offers expert guidance and training to promote the correct use and safe application of its truss systems.

The choice of professionals

Prolyte manufactures trusses with original, advanced designs based on the experience and feedback of a worldwide community of users. Your ideas and requirements are incorporated into the latest generation products to ensure the highest level of functionality, reliability and safety. User experiences and changing market demands are the source of continuous product improvement and inspiration to design new products. With an installed rental base throughout Europa and further, Prolyte is the choice of professionals.

Photo by Gerard Henninger: Stageco, project: Ziggo Dome, 538 Jingleball

Architectural truss

Architectural truss from Prolyte, encompassing the E series, AstraLite and AstraLite truss, as well as the XU30D and XL30D truss provide the solution for systems integrators, retail installations and structures with a mainly decorative function. These trusses combine structural components with highly aesthetic looks and the added functionality of a track lighting system.

Multipurpose truss

The multipurpose truss range comprises of the X30, H30 and H40 series, available in ladder, triangular and square profiles. The X30, H30 and H40 series are light-to-medium-duty truss systems designed for use in the installation, rental and exhibition markets. These trusses are strong, compact, exceptionally versatile, and have low self-weight. Assembly is fool proof due to the continuous webbing of the diagonals. The X and H series are differentiated by wall thickness of the main chords; 2 mm. for the X truss and 3mm. for the H truss. Although almost identical in appearance, H series trusses are up to 30% stronger, specifically on longer spans.

System applications

If you're looking for solutions for permanent or semi permanent installations, architectural set pieces, theatre sets, shop displays, studio grids, or showroom applications, the X series truss is your answer. The exceptional strength in relation to their relatively small dimensions of the X truss makes it the ideal solution for complex structures like displays or booths. The H series trusses are primarily designed for high-frequency users such as rental or exhibition companies, or for semi permanent installations in demanding circumstances like moving lighting rigs in discotheques, stage scenery elements or touring exhibition stands.

Application scope	
	USE
AI-17	Health and safety requirements -lifting equipment / Netherlands
BGV C1 / GUV 6,15	Staging and Production Facilities for the Entertainment Industry / Germany
BS 7906-2	Code of practice for use of aluminium and steel trusses and towers / England
LOLER	Safe use of lifting equipment, lifting operations and lifting equipment regulations / England
NPR 8020-10	Entertainment-rigging-design factors of safety / Netherlands
TISE	The institution of Structural Engineers, Temporary Demountable structures, guidance on use, procurement and design / England
IGVW SQP1	Code of practice for event technology- Provision and Use of Truss Systems / Germany
	MANUFACTURING
ANSI E1.21	Temporary ground-supported overhead structures used to cover the stage and support equipment in the production of outdoor events
ANSI E1.2-2006	Entertainment Technology: Design, Manufacture and Use of Aluminium Trusses and Towers
CWA 15902-2	Lifting and Load-bearing Equipment for Stages and other Production Areas within the Entertainment Industry - Part 2: Specifications for design, manufacture and for use of aluminium and steel trusses and towers
BS 7905-2	Specification for design and manufacture of aluminium and steel trusses and towers
BS 8118	Structural use of Aluminium part 1 code of practice for design
DIN 1055 (all parts)	Design loads on buildings - all parts
DIN 18000-1	Steel structrures; design and construction
EN 13814	Temporary structures, fairground amusements, directives for dimensioning and construction
EN 10002-1	Metallic materials – Tensile testing – Part 1: Method of testing at ambient temperature
EN 10067:1997	Hot rolled bulb flats, Dimensions and tolerances on shape, dimensions and mass
EN 13155	Cranes-safety-non-fixed load lifting attachments
EN 1990	Eurocode 0 Basis of structural design
EN 1991 all parts	Eurocode 1 Actions on structures
EN 1999 all parts	Eurocode 9 design of Aluminium structures
EN 30042:1994	Arc welded joints in aluminium and its weldable alloys - Guidance on quality levels for imperfections.
EN ISO 3834-1 & 3	Quality requirements for welding - Fusion welding of metallic materials - Part 1: Guidelines for selection and use Part 3: Standard quality requirements
EN 292-1	Safety of machinery - Basic concepts, general principles for design - Part 1: Basic terminology, methodology
EN 292-2	Safety of machinery - Basic concepts, general principles for design - Part 2: Technical principles and specifications
EN 754 (all parts)	Aluminium and aluminium alloys - Cold drawn rod/bar and tube
EN 755 (all parts)	Aluminium and aluminium alloys - Extruded rod/bar, tube and profiles
EN 515:1993	Aluminium and aluminium alloys - Wrought products - Temper designations
EN 573 (all parts)	Aluminium and aluminium alloys - Chemical composition and form of wrought products
EN 10204:2004	Metallic products - Types of inspection documents
EN 1090-3	Excecution of steel and aluminium structures-part 3 technical rules for excecution of aluminium structures

Photo: River Island, Oxford Street, London.

AstraLite is an affordable medium-sized trussing system perfect for retail, nightclub and broadcast studio installations. AstraLite is the preferred choice for any application where compact size and low weight must be combined with workable load capacities.

AstraLive is equipped with a universal 3-circuit track system offering 3 x 16A power transmission neatly incorporated into the bottom chord of the truss. Its compact size and low weight is combined with workable load capacities. AstraLive utilizes a 3 phase 16A lighting track.

Coupling system: Bolted Internal tube connection

A03 - AstraLite

Top View

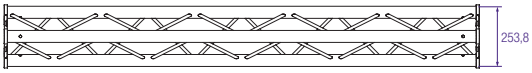

Side View

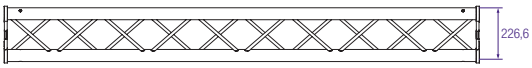

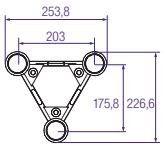

A0L3 - AstraLive

Top View

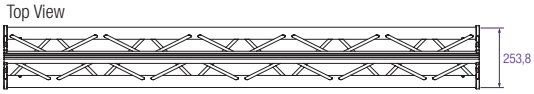

Side View

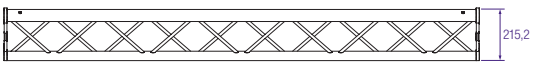

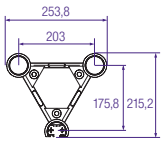

A03 - Allowable Loading

						MAXIMUM ALLOWABLE POINT LOADS										
		Uniformly Distributed Load				Centre Point Load				Single Load Third Points Load per Point		Single Load Fourth Points Load per Point		Single Load Fifth Points Load per Point		
SPAN		UDL		DEFLECTION		CPL		DEFLECTION		TPL		QPL		FPL		SPAN
m	ft	kg/m	lbs/ft	mm	inch	kgs	lbs	mm	inch	kgs	lbs	kgs	lbs	kgs	lbs	total weight
2	6,6	342,6	230,5	2	0,1	342,6	756,1	3	0,1	256,9	567,0	171,3	378,0	142,7	315,0	5,00
3	9,8	150,8	101,4	5	0,2	226,1	499,1	6	0,2	169,6	374,3	113,1	249,5	94,2	207,9	7,50
4	13,1	83,6	56,3	9	0,4	167,2	369,1	11	0,4	125,4	276,8	83,6	184,5	69,7	153,8	10,00
5	16,4	52,5	35,4	14	0,6	131,4	289,9	17	0,7	98,5	217,4	65,7	145,0	54,7	120,8	12,50
6	19,7	35,7	24,0	20	0,8	107,0	236,1	25	1,0	80,2	177,1	53,5	118,1	44,6	98,4	15,00
7	23,0	25,5	17,1	28	1,1	89,2	196,9	33	1,3	66,9	147,6	44,6	98,4	37,2	82,0	17,50
8	26,2	18,9	12,7	36	1,4	75,5	166,7	44	1,7	56,6	125,0	37,8	83,3	31,5	69,4	20,00
9	29,5	14,4	9,7	46	1,8	64,6	142,5	55	2,2	48,4	106,9	32,3	71,3	26,9	59,4	22,50
10	32,8	11,1	7,5	57	2,2	55,6	122,6	68	2,7	41,7	92,0	27,8	61,3	23,1	51,1	25,00
11	36,1	8,7	5,9	69	2,7	47,9	105,8	83	3,2	35,9	79,3	24,0	52,9	20,0	44,1	27,50
12	39,4	6,9	4,6	82	3,2	41,3	91,3	98	3,9	31,0	68,4	20,7	45,6	17,2	38,0	30,00

1 inch = 25,4 mm | 1m = 3.28 ft | 1 lbs = 0,453 kg

AOL 3 - Allowable Loading

						MAXIMUM ALLOWABLE POINT LOADS										
		Uniformly Distributed Load				Centre Point Load				Single Load Third Points Load per Point		Single Load Fourth Points Load per Point		Single Load Fifth Points Load per Point		
SPAN		UDL		DEFLECTION		CPL		DEFLECTION		TPL		QPL		FPL		SPAN
m	ft	kg/m	lbs/ft	mm	inch	kgs	lbs	mm	inch	kgs	lbs	kgs	lbs	kgs	lbs	total weight
1	3,3	288,0	193,8	0	0,0	144,0	317,8	0	0,0	108,0	238,4	72,0	158,9	60,0	132,4	2,50
2	6,6	68,6	46,2	0	0,0	68,8	151,5	0	0,0	51,5	113,6	34,3	75,7	28,6	63,1	5,00
3	9,8	28,0	18,8	1	0,0	42,0	92,7	1	0,0	31,5	69,5	21,0	46,3	17,5	38,6	7,50
4	13,1	13,8	9,3	1	0,0	27,6	60,8	2	0,1	20,7	45,6	13,8	30,4	11,5	25,3	10,00
5	16,4	7,2	4,8	2	0,1	18,0	39,7	3	0,1	13,5	29,8	9,0	19,9	7,5	16,6	12,50
6	19,7	3,6	2,4	3	0,1	10,9	24,0	4	0,2	8,2	18,0	5,4	12,0	4,5	10,0	15,00

1 inch = 25,4 mm | 1m = 3.28 ft | 1 lbs = 0,453 kg

- Tüv certification only valid for loading tables above.
- Loading figures are only valid for static loads.
- Loading figures are only valid for single spans with supports at both ends.
- All static systems, other than single spans, need an individual structural calculation. Please contact a structural engineer or Prolyte Group for assistance.
- Loading figures are calculated according to and in full compliance with European standards (Eurocode).
- The self-weight of the trusses is already taken into account.
- Loading figures are only valid for the cross sectional orientation of the truss as shown by the icon in the loading table.
- The interaction between bending moment and shear force at the connection point is already taken into account.
- Truss spans can be assembled from different truss lengths.
- Read the manual before assembling, using and loading the truss.

Technical Specifications - A03 / AOL3

Type	Triangular (D)
Alloy	EN AW 6082 T6
Main Tubes (Chords)	50,8 x 1,6mm
Braces	12,7 x 1,6mm
Coupling System	Bolted Internal tube connection

Structural data can be found at www.prolyte.com

A03 / AOL3 - Standard available Lengths and Codes

Metres	Feet	Code A03	Code AOL3
0,20	0.66	A03-L020	
0,40	1,31	A03-L040	AOL3-L040
0,60	1,97	A03-L060	AOL3-L060
0,80	2,62	A03-L080	AOL3-L080
1,00	3.28	A03-L100	AOL3-L100
2,00	6.56	A03-L200	AOL3-L200
3,00	9.84	A03-L300	AOL3-L300
4,00	13.12	A03-L400	AOL3-L400
5,00	16.40	A03-L500	

Photo: Prolyte Group

Based on a standard X30D truss, the XU30D truss has a bottom chord designed as a special open profile, which allows the mounting of any standard power track. The most commonly used power tracks will fit this profile. XU30D offers all the advantages of a fully-fledged truss system but with the added functionality of accommodating your own lighting track system, providing maximum flexibility and the certainty of a flawless performance. The XL30D truss is based on a standard X30D truss but includes a 3-phase 16A universal lighting track, suitable for the most common lighting fixture brands. It offers all the advantages of a fully-fledged truss system, such as X30D, with the addition of sophisticated electrical flexibility to complement the system's existing capabilities.

When using the XU30D or XL30D in combination with a regular X30D truss, please be aware that the allowable loading needs to be adjusted to the capacity of the XL30D truss, which is approximately 70% of that of the X30D.

XL30D

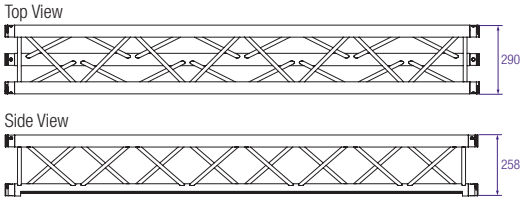

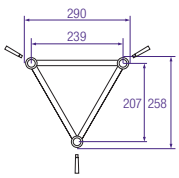

XU30D

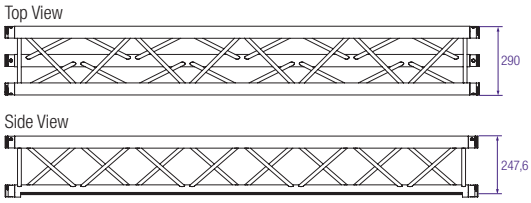

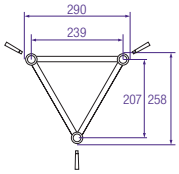

XU30D - Allowable Loading

						MAXIMUM ALLOWABLE POINT LOADS										
		Uniformly Distributed Load				Centre Point Load				Single Load Third Points Load per Point		Single Load Fourth Points Load per Point		Single Load Fifth Points Load per Point		
SPAN		UDL		DEFLECTION		CPL		DEFLECTION		TPL		QPL		FPL		SPAN
m	ft	kg/m	lbs/ft	mm	inch	kgs	lbs	mm	inch	kgs	lbs	kgs	lbs	kgs	lbs	total weight
3	9,8	233,8	157,3	4	0,2	293,3	647,2	5	0,2	195,6	431,7	156,8	346,2	127,2	280,7	9,5
4	13,1	135,4	91,1	8	0,3	231,1	510,1	9	0,4	157,6	347,9	128,1	282,7	99,4	219,3	12,3
5	16,4	86,9	58,4	12	0,5	189,0	417,2	14	0,6	131,0	289,1	102,9	227,1	80,8	178,3	15,1
6	19,7	59,7	40,1	17	0,7	158,4	349,5	21	0,8	111,1	245,1	85,1	187,9	67,4	148,8	17,9
7	23,0	43,0	28,9	23	0,9	134,8	297,6	28	1,1	95,5	210,8	71,8	158,5	57,3	126,4	20,7
8	26,2	32,0	21,5	30	1,2	116,0	256,1	37	1,4	82,9	183,0	61,3	135,4	49,2	108,6	23,5
9	29,5	24,4	16,4	39	1,5	100,6	222,0	46	1,8	72,4	159,9	52,9	116,7	42,6	94,0	26,3
10	32,8	19,0	12,8	48	1,9	87,5	193,1	57	2,2	63,5	140,2	45,8	101,1	37,0	81,7	29,1
11	36,1	14,9	10,1	58	2,3	76,3	168,3	69	2,7	55,8	123,2	39,7	87,7	32,3	71,2	31,9
12	39,4	11,9	8,0	69	2,7	66,4	146,5	82	3,2	49,0	108,2	34,5	76,1	28,1	62,0	34,7

1 inch = 25,4 mm | 1m = 3.28 ft | 1 lbs = 0,453 kg

XL30D - Allowable Loading

						MAXIMUM ALLOWABLE POINT LOADS										
		Uniformly Distributed Load				Centre Point Load				Single Load Third Points Load per Point		Single Load Fourth Points Load per Point		Single Load Fifth Points Load per Point		
SPAN		UDL		DEFLECTION		CPL		DEFLECTION		TPL		QPL		FPL		SPAN
m	ft	kg/m	lbs/ft	mm	inch	kgs	lbs	mm	inch	kgs	lbs	kgs	lbs	kgs	lbs	total weight
3	9,8	189,5	127,5	4	0,2	236,8	522,6	5	0,2	156,6	345,6	124,8	275,4	102,9	227,2	9,5
4	13,1	110,2	74,2	6	0,2	186,9	412,6	10	0,4	126,5	279,3	102,9	227,1	80,5	177,7	12,3
5	16,4	70,7	47,6	10	0,4	152,8	337,2	15	0,6	105,1	232,0	83,7	184,8	65,4	144,3	15,1
6	19,7	48,4	32,6	14	0,6	127,6	281,7	22	0,9	89,0	196,3	69,0	152,3	54,4	120,1	17,9
7	23,0	34,7	23,4	19	0,7	108,2	238,8	29	1,1	76,2	168,2	57,9	127,8	46,0	101,5	20,7
8	26,2	25,7	17,3	25	1,0	92,5	204,2	38	1,5	65,8	145,2	49,2	108,5	39,2	86,6	23,5
9	29,5	19,4	13,1	32	1,3	79,5	175,6	49	1,9	57,1	126,0	42,0	92,7	33,7	74,3	26,3
10	32,8	14,9	10,1	39	1,5	68,5	151,2	60	2,4	49,6	109,4	36,0	79,4	29,0	64,0	29,1
11	36,1	11,6	7,8	47	1,9	58,9	130,0	73	2,9	43,1	95,0	30,8	68,0	24,9	55,0	31,9
12	39,4	9,0	6,1	56	2,2	50,4	111,3	86	3,4	37,3	82,3	26,3	58,0	21,3	47,1	34,7

1 inch = 25,4 mm | 1m = 3.28 ft | 1 lbs = 0,453 kg

- Tüv certification only valid for loading tables above.
- Loading figures are only valid for static loads.
- Loading figures are only valid for single spans with supports at both ends.
- All static systems, other than single spans, need an individual structural calculation. Please contact a structural engineer or Prolyte Group for assistance.
- Loading figures are calculated according to and in full compliance with European standards (Eurocode).
- The self-weight of the trusses is already taken into account.
- Loading figures are only valid for the cross sectional orientation of the truss as shown by the icon in the loading table.
- The interaction between bending moment and shear force at the connection point is already taken into account.
- Truss spans can be assembled from different truss lengths.
- Read the manual before assembling, using and loading the truss.

Technical Specifications - XU30D / XL30D

Type	Triangular (D)
Alloy	EN AW 6082 T6
Main Tubes (Chords)	51 x 2 mm
Braces	16 x 2 mm
Coupling System	CCS6 Conical coupling system
Lighting Track	Open profile for mounting of standard lighting track

Structural data can be found at www.prolyte.com

XU30D / XL30D - Standard available Lengths and Codes

Metres	Feet	Code*
0,50	1.64	X•30D-L050
0,71	2.33	X•30D-L071
0,75	2.46	X•30D-L075
1,00	3.28	X•30D-L100
1,50	4.57	X•30D-L150
2,00	6.56	X•30D-L200
2,50	8.20	X•30D-L250
3,00	9.84	X•30D-L300
3,50	11.48	X•30D-L350
4,00	13.12	X•30D-L400

*on • indicate U for XU30D and L for XL30D

Photo: Le Creuset GmbH, Germany. Project: Messe Leipzig.

Designed as a lightweight, light-duty truss system with a mainly decorative function, the E20 Series is a small and aesthetically pleasing truss that can be used for structural purposes as well. Compact construction, optimum strength and high-tech appearance make this truss an appropriate decorative element with numerous applications. E20 Series is available in triangular and square profiles.

E20D

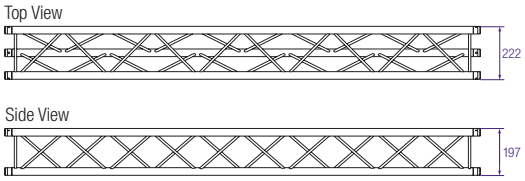

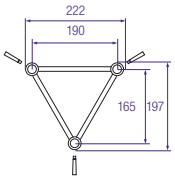

E20V

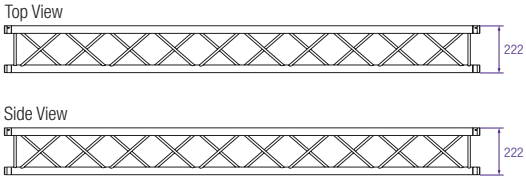

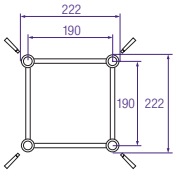

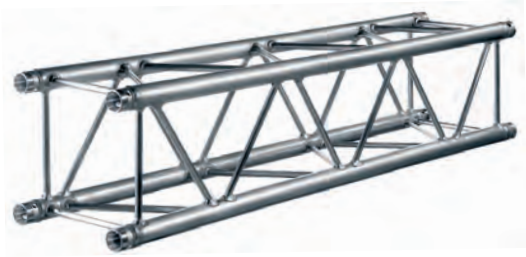

E20D - Allowable Loading

SPAN		Uniformly Distributed Load UDL		DEFLECTION		MAXIMUM ALLOWABLE POINT LOADS: Centre Point Load CPL		DEFLECTION		Single Load Third Points Load per Point TPL		Single Load Fourth Points Load per Point QPL		Single Load Fifth Points Load per Point FPL		SPAN
m	ft	kg/m	lbs/ft	mm	inch	kgs	lbs	mm	inch	kgs	lbs	kgs	lbs	kgs	lbs	total weight
3	9,8	97,2	65,4	10	0,4	125,9	277,8	8	0,3	88,4	195,1	67,6	149,1	53,7	118,4	4,8
4	13,1	54,0	36,4	18	0,7	96,7	213,5	14	0,6	69,0	152,4	51,0	112,7	41,0	90,6	6,4
5	16,4	34,1	22,9	28	1,1	78,0	172,1	22	0,9	56,3	124,2	40,7	89,8	33,0	72,8	8,0
6	19,7	23,2	15,6	40	1,6	64,8	142,9	32	1,3	47,1	104,1	33,6	74,1	27,3	60,3	9,6
7	23,0	16,7	11,2	54	2,1	54,9	121,1	43	1,7	40,3	88,9	28,3	62,4	23,1	51,1	11,2
8	26,2	12,4	8,4	71	2,8	47,2	104,1	56	2,2	34,8	76,9	24,2	53,4	19,9	43,9	12,8
9	29,5	9,5	6,4	89	3,5	40,9	90,3	71	2,8	30,4	67,2	20,9	46,2	17,3	38,1	14,4
10	32,8	7,4	5,0	110	4,3	35,7	78,9	88	3,5	26,8	59,1	18,2	40,2	15,1	33,3	16,0
11	36,1	5,9	4,0	133	5,3	31,3	69,1	107	4,2	23,6	52,1	15,9	35,2	13,2	29,2	17,6
12	39,4	4,7	3,2	159	6,2	27,5	60,7	127	5,0	20,9	46,1	14,0	30,8	11,6	25,6	19,0
13	42,6	3,8	2,6	186	7,3	24,1	53,3	149	5,9	18,4	40,7	12,2	27,0	10,2	22,5	20,6
14	45,9	3,1	2,1	216	8,5	21,1	46,6	173	6,8	16,2	35,8	10,7	23,6	8,9	19,7	22,2
15	49,2	2,5	1,7	248	9,8	18,4	40,6	199	7,8	14,1	31,1	9,3	20,5	7,8	17,2	23,8
16	52,5	2,0	1,4	282	11,1	15,9	35,2	226	8,9	12,2	26,9	8,0	17,7	6,8	14,9	25,4
17	55,8	1,6	1,1	319	12,5	13,7	30,2	255	10,0	10,4	23,0	6,9	15,2	5,8	12,8	27,0
18	59,0	1,3	0,9	357	14,1	11,6	25,5	286	11,3	8,8	19,4	5,8	12,8	4,9	10,8	28,6

1 inch = 25,4 mm | 1m = 3.28 ft | 1 lbs = 0,453 kg

- Tüv certification only valid for loading table above.
- Loading figures are only valid for static loads.
- Loading figures are only valid for single spans with supports at both ends.
- All static systems, other than single spans, need an individual structural calculation. Please contact a structural engineer or Prolyte Group for assistance.
- Loading figures are calculated according to and in full compliance with European standards (Eurocode).
- The self-weight of the trusses is already taken into account.
- Loading figures are only valid for the cross sectional orientation of the truss as shown by the icon in the loading table.
- The interaction between bending moment and shear force at the connection point is already taken into account.
- Truss spans can be assembled from different truss lengths.
- Read the manual before assembling, using and loading the truss.

Technical Specifications - E20 Series

Types	Triangular (D), Square (V)
Alloy	EN AW 6060 T5
Main Tubes (Chords)	32 x 1,5 mm
Braces	10 x 1,0 mm
Coupling System	CCS4

Structural data can be found at www.prolyte.com

E20 Series - Standard available Lengths and Codes

Metres	Feet	Code*
0.25/1.00 m in 5 mm steps	0.82'/3.28', in 0.2' steps	
0,25	0.38	E20•-L025
0,50	1.64	E20•-L050
0,58	1.90	E20•-L058
0,75	2.46	E20•-L075
1,00	3.28	E20•-L100
1,50	4.57	E20•-L150
2,00	6.56	E20•-L200
2,50	8.20	E20•-L250
3,00	9.84	E20•-L300
3,50	11.48	E20•-L350
4,00	13.12	E20•-L400

*on • indicate L for Ladder, D for Triangular or V for Square truss. Example: E20V-L200

E20V - Allowable Loading

						MAXIMUM ALLOWABLE POINT LOADS										
		Uniformly Distributed Load				Centre Point Load				Single Load Third Points Load per Point		Single Load Fourth Points Load per Point		Single Load Fifth Points Load per Point		
SPAN		UDL		DEFLECTION		CPL		DEFLECTION		TPL		QPL		FPL		SPAN
m	ft	kg/m	lbs/ft	mm	inch	kgs	lbs	mm	inch	kgs	lbs	kgs	lbs	kgs	lbs	total weight
3	9,8	123,2	82,9	8	0,3	265,7	586,3	6	0,2	184,8	407,9	123,2	272,0	92,4	204,0	6,3
4	13,1	91,9	61,9	14	0,5	209,5	462,3	11	0,4	145,7	321,6	115,4	254,6	91,9	202,9	8,4
5	16,4	73,2	49,2	21	0,8	172,3	380,2	17	0,7	120,8	266,6	92,6	204,4	73,5	162,1	10,5
6	19,7	55,1	37,1	31	1,2	145,6	321,4	25	1,0	103,3	227,9	77,4	170,8	61,9	136,6	12,6
7	23,0	40,0	26,9	42	1,6	125,6	277,1	33	1,3	89,8	198,2	66,2	146,0	53,2	117,5	14,7
8	26,2	30,2	20,3	55	2,2	109,8	242,4	44	1,7	79,1	174,7	57,5	126,9	46,5	102,6	16,8
9	29,5	23,4	15,8	69	2,7	97,1	214,3	55	2,2	70,4	155,4	50,5	111,5	41,0	90,6	18,9
10	32,8	18,6	12,5	85	3,4	86,5	191,0	68	2,7	63,2	139,4	44,8	99,0	36,5	80,6	21
11	36,1	15,1	10,1	103	4,1	77,6	171,2	83	3,3	56,9	125,7	40,1	88,4	32,7	72,3	23,1
12	39,4	12,4	8,3	123	4,8	69,9	154,2	98	3,9	51,6	113,8	36,0	79,4	29,5	65,1	25,2
13	42,6	10,2	6,9	144	5,7	63,2	139,4	115	4,5	46,9	103,4	32,4	71,5	26,6	58,8	27,3
14	45,9	8,6	5,8	167	6,6	57,2	126,3	134	5,3	42,7	94,2	29,3	64,6	24,1	53,3	29,4
15	49,2	7,2	4,9	192	7,6	51,9	114,5	154	6,1	38,9	85,9	26,5	58,5	21,9	48,3	31,5
16	52,5	6,1	4,1	219	8,6	47,1	103,9	175	6,9	35,5	78,4	24,0	53,0	19,9	43,9	33,6
17	55,8	5,2	3,5	247	9,7	42,7	94,3	198	7,8	32,4	71,5	21,7	48,0	18,1	39,8	35,7
18	59,0	4,4	3,0	277	10,9	38,7	85,4	221	8,7	29,5	65,1	19,7	43,4	16,4	36,1	37,8
19	62,3	3,8	2,6	308	12,1	35,0	77,2	247	9,7	26,8	59,3	17,7	39,2	14,8	32,7	39,9
20	65,6	3,2	2,2	342	13,4	31,5	69,6	273	10,8	24,3	53,6	16,0	35,3	13,4	29,5	42

1 inch = 25,4 mm | 1m = 3.28 ft | 1 lbs = 0,453 kg

- Tüv certification only valid for loading table above.
- Loading figures are only valid for static loads.
- Loading figures are only valid for single spans with supports at both ends.
- All static systems, other than single spans, need an individual structural calculation. Please contact a structural engineer or Prolyte Group for assistance.
- Loading figures are calculated according to and in full compliance with European standards (Eurocode).
- The self-weight of the trusses is already taken into account.
- Loading figures are only valid for the cross sectional orientation of the truss as shown by the icon in the loading table.
- The interaction between bending moment and shear force at the connection point is already taken into account.
- Truss spans can be assembled from different truss lengths.
- Read the manual before assembling, using and loading the truss.

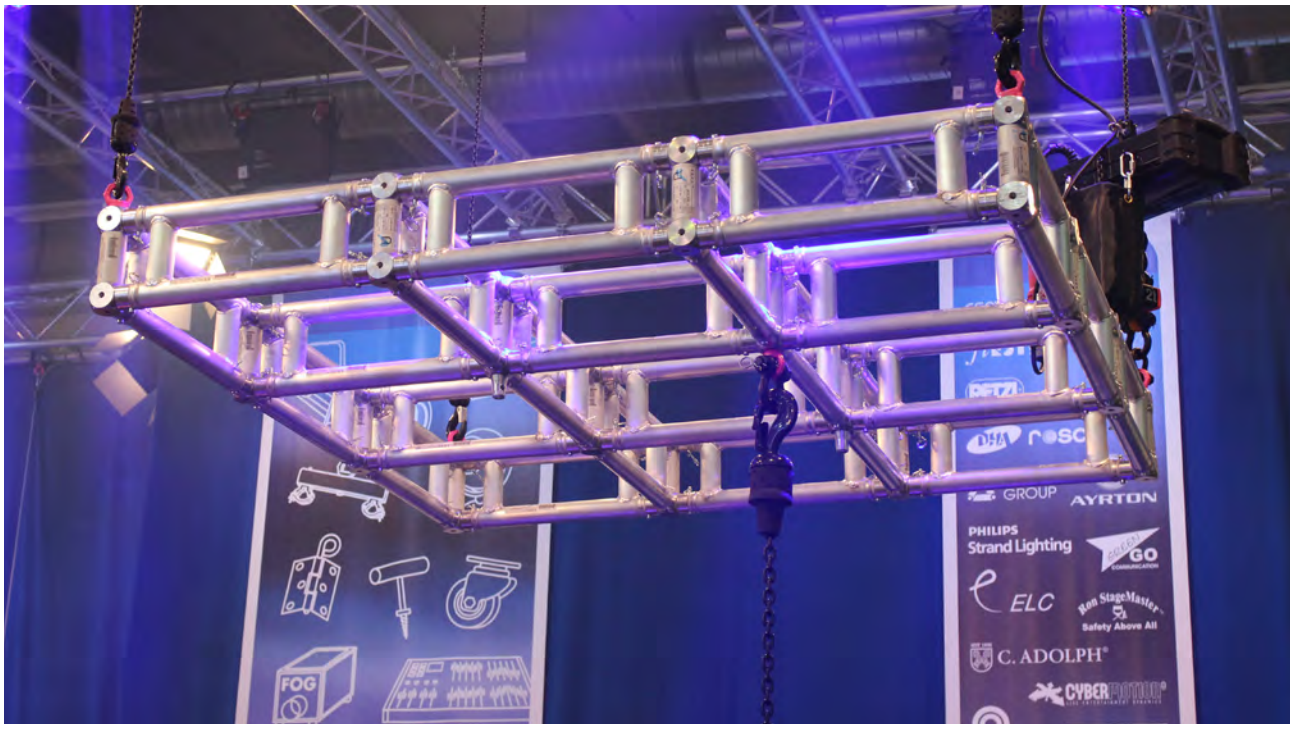

Photo: Cast

MATRIX FRAMES FROM H20LB TRUSS

The H20LB ladder truss is a frame girder - truss without the diagonal members and with rigid joints between top and bottom chords and the verticals.The H20LB is designed to create matrix frames for circumstances where low headroom requires support grids with minimum heights, like studio installations, retail or exhibition applications.

Main chords and verticals are designed from 48,3 mm tubes, the verticals are positioned every 500 mm, to create maximum utility between the verticals. Most standard clamps will fit the 48,3 mm tube. The standard box corner ribs, with the Prolyte conical coupling system, guarantees fast and easy assembly when compared to traditional bolted structures.

H20LB

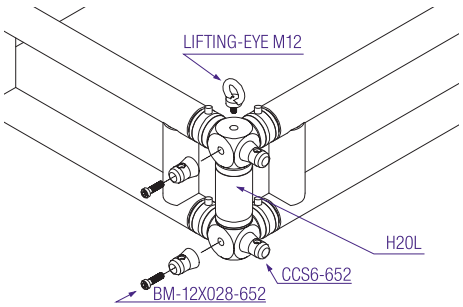

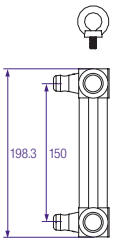

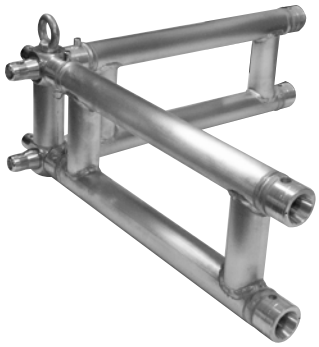

H20LB - Allowable Loading

SPAN		Uniformly Distributed Load				
		UDL		CPL		
m	ft	kg/m	lbs/ft	kgs	lbs	total weight
1,00	3,30	620	417,3	420	282,7	3.3
1,50	4,90	350	235,6	350	235,6	4.6
2,00	6,60	160	107,7	240	161,6	5.9
2,50	8,20	150	101,0	200	134,6	7.2
3,00	9,80	120	80,8	190	127,9	8.5
3,50	11,50	90	60,6	170	114,4	8.9
4,00	13,10	70	47,1	150	101,0	9.8
4,50	14,70	60	40,4	130	87,5	11.2
5,00	16,40	45	30,3	110	74,0	12.7

1 inch = 25,4 mm | 1m = 3.28 ft | 1 lbs = 0,453 kg

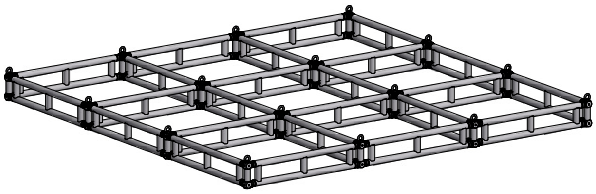

Photo: PERINIC SISTEMI D.O.O., Croatia

X30 Series truss is constructed of main tubes (51 x 2 mm) and diagonals (16 x 2 mm), and uses the CCS6 coupling system. ProlyteStructures supplies a variety of X30 Series truss elements that provide maximum flexibility, including standard or custom-made lengths, circles and arches and several types of corners. ProlyteStructures can create custom-made pieces on request.

X30L

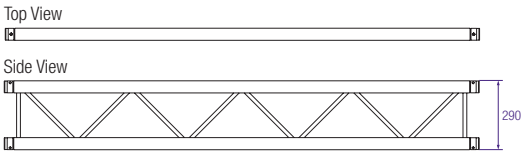

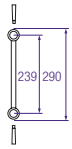

X30D

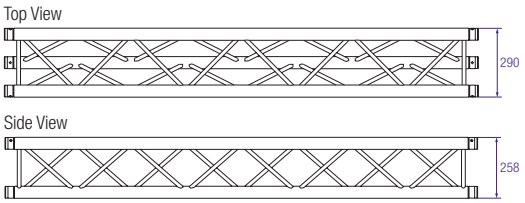

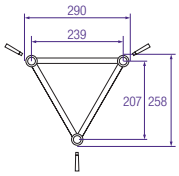

X30V

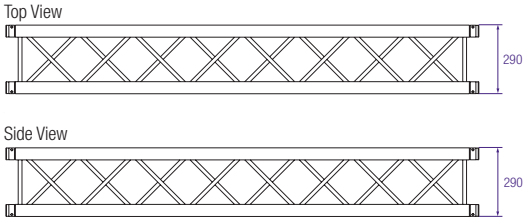

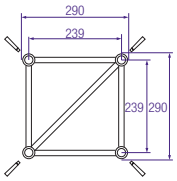

X30D - Allowable Loading

						MAXIMUM ALLOWABLE POINT LOADS										
		Uniformly Distributed Load				Centre Point Load				Single Load Third Points Load per Point		Single Load Fourth Points Load per Point		Single Load Fifth Points Load per Point		
SPAN		UDL		DEFLECTION		CPL		DEFLECTION		TPL		QPL		FPL		SPAN
m	ft	kg/m	lbs/ft	mm	inch	kgs	lbs	mm	inch	kgs	lbs	kgs	lbs	kgs	lbs	total weight
3	9,8	443,7	298,6	13	0,5	576,3	1272,0	10	0,4	405,2	894,3	308,9	681,7	245,6	542,1	11,4
4	13,1	248,1	166,9	23	0,9	444,8	981,8	19	0,7	317,5	700,6	234,6	517,7	188,6	416,3	15,2
5	16,4	157,6	106,0	36	1,4	360,8	796,3	29	1,1	260,1	574,1	188,3	415,6	152,5	336,6	19,0
6	19,7	108,4	72,9	52	2,1	302,2	667,0	42	1,7	219,5	484,5	156,6	345,7	127,5	281,4	22,8
7	23,0	78,7	53,0	71	2,8	258,9	571,4	57	2,2	189,2	417,6	133,5	294,6	109,1	240,7	26,6
8	26,2	59,5	40,0	93	3,7	225,4	497,4	75	2,9	165,6	365,4	115,7	255,4	94,9	209,4	30,4
9	29,5	46,3	31,1	118	4,6	198,6	438,2	94	3,7	146,6	323,5	101,6	224,3	83,6	184,4	34,2
10	32,8	36,8	24,8	146	5,7	176,6	389,7	117	4,6	130,9	289,0	90,1	198,9	74,3	163,9	38,0
11	36,1	29,8	20,1	176	6,9	158,1	348,9	141	5,6	117,7	259,9	80,5	177,7	66,5	146,8	41,8
12	39,4	24,5	16,5	210	8,3	142,3	314,0	168	6,6	106,4	234,9	72,3	159,7	59,9	132,1	45,6
13	42,6	20,4	13,7	246	9,7	128,6	283,8	197	7,8	96,6	213,2	65,3	144,1	54,1	119,5	49,4
14	45,9	17,1	11,5	285	11,2	116,5	257,2	228	9,0	87,9	194,1	59,1	130,4	49,1	108,3	53,2
15	49,2	14,5	9,7	328	12,9	105,8	233,6	262	10,3	80,2	177,1	53,6	118,2	44,6	98,4	57,0
16	52,5	12,3	8,3	373	14,7	96,2	212,3	298	11,7	73,3	161,7	48,6	107,4	40,6	89,6	60,8

1 inch = 25,4 mm | 1m = 3.28 ft | 1 lbs = 0,453 kg

- Tüv certification only valid for loading table above.
- Loading figures are only valid for static loads.
- Loading figures are only valid for single spans with supports at both ends.
- All static systems, other than single spans, need an individual structural calculation. Please contact a structural engineer or Prolyte Group for assistance.
- Loading figures are calculated according to and in full compliance with European standards (Eurocode).
- The self-weight of the trusses is already taken into account.
- Loading figures are only valid for the cross sectional orientation of the truss as shown by the icon in the loading table.
- The interaction between bending moment and shear force at the connection point is already taken into account.
- Truss spans can be assembled from different truss lengths.
- Read the manual before assembling, using and loading the truss.

Technical Specifications - X30 Series

Types	Ladder (L), Triangular (D), Square (V)
Alloy	EN AW 6082 T6
Main Tubes (Chords)	51 x 2 mm
Braces	16 x 2 mm
Coupling System	CCS6

Structural data can be found at www.prolyte.com

X Coupler - 1 ring

H Coupler - 2 rings

The number of recessed rings in the coupler receiver distinguishes the X and H Series.

X30 Series - Standard available Lengths and Codes

Metres	Feet	Code*
0.25/1.00 m in 5 mm steps	0.82'/3.28', in 0.2' steps	
0,25	0.82	X30•-L025
0,29	0.95	X30•-L029
0,50	1.64	X30•-L050
0,71	2.33	X30•-L071
0,75	2.46	X30•-L075
1,00	3.28	X30•-L100
1,50	4.57	X30•-L150
2,00	6.56	X30•-L200
2,50	8.20	X30•-L250
3,00	9.84	X30•-L300
3,50	11.48	X30•-L350
4,00	13.12	X30•-L400
4,50	14.76	X30•-L450
5,00	16.40	X30•-L500

*on • indicate L for Ladder, D for Triangular or V for Square truss. Example: X30V-L200

X30V - Allowable Loading

						MAXIMUM ALLOWABLE POINT LOADS										
		Uniformly Distributed Load				Centre Point Load				Single Load Third Points Load per Point		Single Load Fourth Points Load per Point		Single Load Fifth Points Load per Point		
SPAN		UDL		DEFLECTION		CPL		DEFLECTION		TPL		QPL		FPL		SPAN
m	ft	kg/m	lbs/ft	mm	inch	kgs	lbs	mm	inch	kgs	lbs	kgs	lbs	kgs	lbs	total weight
3	9,8	650,0	437,4	10	0,4	1215,0	2681,5	8	0,3	853,5	1883,6	650,0	1434,6	487,5	1076,0	15,3
4	13,1	486,4	327,3	18	0,7	959,5	2117,5	15	0,6	664,0	1465,5	523,6	1155,5	411,2	907,5	20,4
5	16,4	367,1	247,0	28	1,1	791,1	1746,0	23	0,9	555,2	1225,4	424,9	937,7	337,3	744,5	25,5
6	19,7	253,5	170,6	41	1,6	671,5	1482,0	33	1,3	476,1	1050,8	356,6	787,1	285,4	629,8	30,6
7	23,0	185,1	124,5	55	2,2	581,9	1284,3	44	1,7	415,9	918,0	306,5	676,5	246,7	544,4	35,7
8	26,2	140,6	94,6	72	2,9	512,2	1130,4	58	2,3	368,5	813,2	268,1	591,6	216,7	478,3	40,8
9	29,5	110,1	74,1	92	3,6	456,2	1006,8	73	2,9	330,0	728,3	237,5	524,2	192,7	425,4	45,9
10	32,8	88,3	59,4	113	4,5	410,1	905,1	91	3,6	298,1	658,0	212,7	469,3	173,1	382,0	51,0
11	36,1	72,2	48,6	137	5,4	371,4	819,7	110	4,3	271,2	598,6	191,9	423,6	156,6	345,7	56,1
12	39,4	59,9	40,3	163	6,4	338,4	746,9	131	5,1	248,1	547,6	174,4	384,8	142,7	314,8	61,2
13	42,6	50,4	33,9	191	7,5	309,9	683,9	153	6,0	228,1	503,4	159,2	351,4	130,6	288,2	66,3
14	45,9	42,8	28,8	222	8,7	284,9	628,7	178	7,0	210,5	464,5	146,1	322,4	120,0	264,8	71,4
15	49,2	36,7	24,7	255	10,0	262,7	579,8	204	8,0	194,8	429,9	134,4	296,7	110,7	244,2	76,5
16	52,5	31,7	21,3	290	11,4	242,9	536,1	232	9,1	180,8	399,0	124,1	273,9	102,3	225,9	81,6
17	55,8	27,6	18,5	327	12,9	225,1	496,8	262	10,3	168,1	371,0	114,8	253,4	94,8	209,3	86,7
18	59,0	24,1	16,2	367	14,4	208,9	461,1	294	11,6	156,6	345,6	106,4	234,8	88,0	194,3	91,8
19	62,3	21,2	14,2	409	16,1	194,1	428,5	327	12,9	146,0	322,3	98,7	217,9	81,8	180,6	96,9
20	65,6	18,6	12,5	453	17,8	180,5	398,5	363	14,3	136,3	300,8	91,7	202,4	76,1	168,1	102

1 inch = 25,4 mm | 1m = 3.28 ft | 1 lbs = 0,453 kg

- Tüv certification only valid for loading table above.
- Loading figures are only valid for static loads.
- Loading figures are only valid for single spans with supports at both ends.
- All static systems, other than single spans, need an individual structural calculation. Please contact a structural engineer or Prolyte Group for assistance.
- Loading figures are calculated according to and in full compliance with European standards (Eurocode).
- The self-weight of the trusses is already taken into account.
- Loading figures are only valid for the cross sectional orientation of the truss as shown by the icon in the loading table.
- The interaction between bending moment and shear force at the connection point is already taken into account.
- Truss spans can be assembled from different truss lengths.
- Read the manual before assembling, using and loading the truss.

X30L - Allowable Loading (Span supported on top chord.)

SPAN		UDL (Uniformly Distributed Load)		DEFLECTION		CPL		DEFLECTION	
m	ft	kg/m	lbs/ft	mm	inch	kgs	lbs	mm	inch
1	3,3	979,7	659,2	2	0,1	979,7	2162,2	1	0,0
2	6,6	345,0	232,1	1	0,1	345,0	761,4	1	0,0
3	9,8	135,0	90,8	3	0,1	203,0	448,0	2	0,1
4	13,1	64,0	43,1	4	0,2	128,0	282,5	3	0,1
5	16,4	27,0	18,2	4	0,2	67,0	147,9	3	0,1
6	19,7	12,0	8,1	4	0,1	36,0	79,5	3	0,1

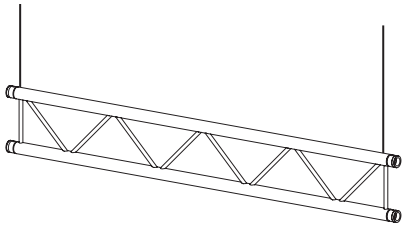

1 inch = 25,4 mm | 1m = 3.28 ft | 1 lbs = 0,453 kg

Spans must be supported at each end.
Loads must be suspended from bottom chord only.

X30L - Allowable Loading (Top chord sideways supported each metre.)

SPAN		UDL (Uniformly Distributed Load)		DEFLECTION		CPL		DEFLECTION	
m	ft	kg/m	lbs/ft	mm	inch	kgs	lbs	mm	inch
4	13,1	243,2	163,7	18	0,7	459,8	1014,8	15	0,6
5	16,4	176,3	118,6	28	1,1	381,7	842,3	23	0,9
6	19,7	123,2	82,9	41	1,6	325,5	718,3	33	1,3
7	23,0	90,6	61,0	55	2,2	283,0	624,7	44	1,7
8	26,2	69,2	46,6	72	2,9	249,8	551,2	58	2,3
9	29,5	54,4	36,6	92	3,6	222,9	492,0	73	2,9
10	32,8	43,7	29,4	113	4,5	200,7	443,0	91	3,6
11	36,1	35,8	24,1	137	5,4	182,1	401,8	110	4,3
12	39,4	29,8	20,0	163	6,4	166,1	366,5	131	5,1

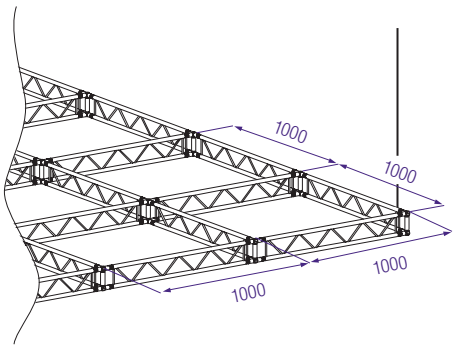

1 inch = 25,4 mm | 1m = 3.28 ft | 1 lbs = 0,453 kg

Spans must be supported at each end.
Loads must be suspended from bottom chord only.

X30L - Allowable Loading (Top chords sideways supported every 2 metres.)

SPAN		UDL (Uniformly Distributed Load)		DEFLECTION		CPL		DEFLECTION	
m	ft	kg/m	lbs/ft	mm	inch	kgs	lbs	mm	inch
4	13,1	84,6	56,9	5	0,2	169,1	373,3	4	0,2
5	16,4	53,3	35,9	8	0,3	133,3	294,1	7	0,3
6	19,7	36,3	24,4	12	0,5	109,0	240,6	10	0,4
7	23,0	26,1	17,6	17	0,7	91,3	201,6	13	0,5
8	26,2	19,5	13,1	22	0,9	77,8	171,7	17	0,7
9	29,5	14,9	10,0	27	1,1	67,0	148,0	22	0,9
10	32,8	11,6	7,8	34	1,3	58,2	128,4	27	1,1
11	36,1	9,2	6,2	41	1,6	50,8	112,0	33	1,3
12	39,4	7,4	5,0	49	1,9	44,4	97,9	39	1,5

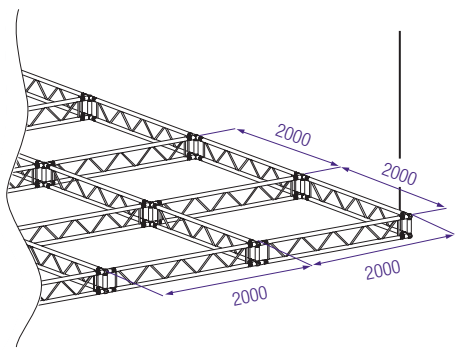

1 inch = 25,4 mm | 1m = 3.28 ft | 1 lbs = 0,453 kg

Spans must be supported at each end.
Loads must be suspended from bottom chord only.

Photo: Creativ-Design, Germany.

H30 Series truss is constructed of main tubes (48,3 x 3 mm) and diagonals (16 x 2 mm), and uses the CCS6 coupling system. ProlyteStructures supplies a variety of H30 Series truss elements that provide maximum flexibility, including standard or custom-made lengths, circles and arches and several types of corners. ProlyteStructures can create custom-made pieces on request.

H30L

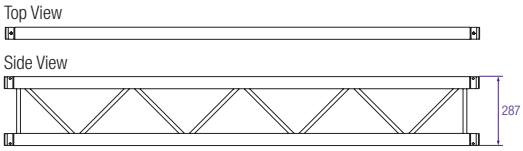

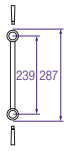

H30D

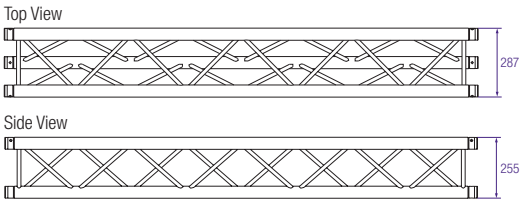

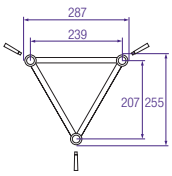

H30V

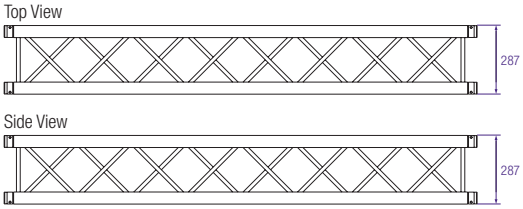

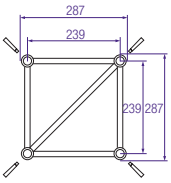

H30D - Allowable Loading

						MAXIMUM ALLOWABLE POINT LOADS										
		Uniformly Distributed Load				Centre Point Load				Single Load Third Points Load per Point		Single Load Fourth Points Load per Point		Single Load Fifth Points Load per Point		
SPAN		UDL		DEFLECTION		CPL		DEFLECTION		TPL		QPL		FPL		SPAN
m	ft	kg/m	lbs/ft	mm	inch	kgs	lbs	mm	inch	kgs	lbs	kgs	lbs	kgs	lbs	total weight
3	9,8	562,4	378,4	13	0,5	782,3	1726,6	11	0,4	546,6	1206,4	422,2	931,8	334,1	737,4	15,0
4	13,1	342,0	230,1	23	0,9	606,0	1337,5	19	0,7	430,3	949,7	321,3	709,2	257,4	568,1	20,0
5	16,4	217,3	146,2	37	1,5	492,8	1087,6	29	1,2	353,7	780,6	258,4	570,2	208,6	460,4	25,0
6	19,7	149,5	100,6	53	2,1	413,6	912,8	42	1,7	299,3	660,5	215,2	474,9	174,7	385,5	30,0
7	23,0	108,6	73,1	72	2,8	354,9	783,2	57	2,3	258,4	570,4	183,6	405,1	149,6	330,3	35,0
8	26,2	82,1	55,3	94	3,7	309,4	682,8	75	3,0	226,6	500,0	159,3	351,6	130,3	287,7	40,0
9	29,5	63,9	43,0	118	4,6	273,0	602,4	95	3,7	200,9	443,4	140,1	309,2	114,9	253,6	45,0
10	32,8	50,9	34,3	146	5,7	243,1	536,4	117	4,6	179,7	396,6	124,4	274,5	102,3	225,8	50,0
11	36,1	41,3	27,8	177	7,0	217,9	481,0	142	5,6	161,8	357,2	111,2	245,5	91,7	202,4	55,0
12	39,4	34,0	22,9	211	8,3	196,5	433,6	169	6,6	146,5	323,4	100,1	220,9	82,7	182,5	60,0
13	42,6	28,3	19,0	247	9,7	177,8	392,5	198	7,8	133,2	294,0	90,4	199,6	74,9	165,2	65,0
14	45,9	23,8	16,0	287	11,3	161,4	356,3	229	9,0	121,5	268,1	82,0	180,9	68,0	150,1	70,0
15	49,2	20,1	13,6	329	13,0	146,9	324,1	263	10,4	111,0	245,0	74,5	164,3	61,9	136,6	75,0
16	52,5	17,2	11,5	375	14,8	133,8	295,3	300	11,8	101,6	224,2	67,7	149,5	56,4	124,5	60,8

1 inch = 25,4 mm | 1m = 3.28 ft | 1 lbs = 0,453 kg

- Tüv certification only valid for loading table above.
- Loading figures are only valid for static loads.
- Loading figures are only valid for single spans with supports at both ends.
- All static systems, other than single spans, need an individual structural calculation. Please contact a structural engineer or Prolyte Group for assistance.
- Loading figures are calculated according to and in full compliance with European standards (Eurocode).
- The self-weight of the trusses is already taken into account.
- Loading figures are only valid for the cross sectional orientation of the truss as shown by the icon in the loading table.
- The interaction between bending moment and shear force at the connection point is already taken into account.
- Truss spans can be assembled from different truss lengths.
- Read the manual before assembling, using and loading the truss.

Technical Specifications - H30 Series

Types	Ladder (L), Triangular (D), Square (V)
Alloy	EN AW 6082 T6
Main Tubes (Chords)	48,3 x 3 mm
Braces	16 x 2 mm
Coupling System	CCS6

Structural data can be found at www.prolyte.com

X Coupler - 1 ring

H Coupler - 2 rings

The number of recessed rings in the coupler receiver distinguishes the X and H Series.

H30 Series - Standard available Lengths and Codes

Metres	Feet	Code*
0.25/1.00 m in 5 mm steps	0.82'/3.28', in 0.2' steps	
0,25	0.82	H30•-L025
0,29	0.95	H30•-L029
0,50	1.64	H30•-L050
0,71	2.33	H30•-L071
0,75	2.46	H30•-L075
1,00	3.28	H30•-L100
1,50	4.57	H30•-L150
2,00	6.56	H30•-L200
2,50	8.20	H30•-L250
3,00	9.84	H30•-L300
3,50	11.48	H30•-L350
4,00	13.12	H30•-L400
4,50	14.76	H30•-L450
5,00	16.40	H30•-L500

*on • indicate L for Ladder, D for Triangular or V for Square truss. Example: H30V-L200

H30V - Allowable Loading

SPAN		Uniformly Distributed Load UDL		DEFLECTION		MAXIMUM ALLOWABLE POINT LOADS: Centre Point Load CPL		DEFLECTION		Single Load Third Points Load per Point TPL		Single Load Fourth Points Load per Point QPL		Single Load Fifth Points Load per Point FPL		SPAN
m	ft	kg/m	lbs/ft	mm	inch	kgs	lbs	mm	inch	kgs	lbs	kgs	lbs	kgs	lbs	total weight
3	9,8	649,0	436,7	10	0,4	1667,9	3681,0	8	0,3	973,4	2148,4	649,0	1432,2	486,7	1074,2	18,9
4	13,1	485,3	326,5	18	0,7	1298,1	2864,9	15	0,6	932,1	2057,2	647,1	1428,1	485,3	1071,1	25,2
5	16,4	387,1	260,5	28	1,1	1074,2	2370,9	23	0,9	749,1	1653,3	581,1	1282,5	469,0	1035,1	31,5
6	19,7	321,6	216,4	41	1,6	914,4	2018,2	33	1,3	644,7	1422,8	488,7	1078,6	389,3	859,3	37,8
7	23,0	255,6	172,0	56	2,2	794,4	1753,2	45	1,8	564,8	1246,5	420,7	928,6	337,3	744,4	44,1
8	26,2	194,4	130,8	73	2,9	700,6	1546,3	58	2,3	501,6	1107,0	368,5	813,3	296,9	655,2	50,4
9	29,5	152,4	102,5	92	3,6	625,2	1379,9	74	2,9	450,2	993,7	327,0	721,8	264,5	583,8	56,7
10	32,8	122,3	82,3	114	4,5	563,2	1242,9	91	3,6	407,6	899,5	293,2	647,1	238,0	525,2	63,0
11	36,1	100,1	67,4	137	5,4	511,0	1127,8	110	4,3	371,5	820,0	265,1	585,0	215,7	476,1	69,3
12	39,4	83,2	56,0	164	6,5	466,5	1029,6	131	5,2	340,6	751,7	241,2	532,3	196,8	434,3	75,6
13	42,6	70,1	47,2	192	7,6	428,0	944,6	154	6,1	313,7	692,4	220,7	487,0	180,5	398,3	81,9
14	45,9	59,6	40,1	223	8,8	394,3	870,2	178	7,0	290,1	640,2	202,8	447,5	166,2	366,8	88,2
15	49,2	51,2	34,5	256	10,1	364,5	804,3	205	8,1	269,1	593,8	187,0	412,8	153,6	338,9	94,5
16	52,5	44,3	29,8	291	11,5	337,8	745,5	233	9,2	250,3	552,3	173,0	381,9	142,3	314,1	100,8
17	55,8	38,6	26,0	328	12,9	313,8	692,5	263	10,4	233,3	514,9	160,4	354,1	132,2	291,8	107,1
18	59,0	33,8	22,8	368	14,5	292,0	644,5	295	11,6	217,9	480,8	149,1	329,0	123,1	271,6	113,4
19	62,3	29,8	20,0	410	16,1	272,2	600,7	328	12,9	203,7	449,6	138,7	306,2	114,7	253,2	119,7
20	65,6	26,3	17,7	454	17,9	253,9	560,4	364	14,3	190,7	420,9	129,3	285,3	107,1	236,3	126

1 inch = 25,4 mm | 1m = 3.28 ft | 1 lbs = 0,453 kg

- Tüv certification only valid for loading table above.
- Loading figures are only valid for static loads.
- Loading figures are only valid for single spans with supports at both ends.
- All static systems, other than single spans, need an individual structural calculation. Please contact a structural engineer or Prolyte Group for assistance.
- Loading figures are calculated according to and in full compliance with European standards (Eurocode).
- The self-weight of the trusses is already taken into account.
- Loading figures are only valid for the cross sectional orientation of the truss as shown by the icon in the loading table.
- The interaction between bending moment and shear force at the connection point is already taken into account.
- Truss spans can be assembled from different truss lengths.
- Read the manual before assembling, using and loading the truss.

H30L - Allowable Loading (Span supported on top chord.)

SPAN		UDL (Uniformly Distributed Load)		DEFLECTION		CPL		DEFLECTION	
m	ft	kg/m	lbs/ft	mm	inch	kgs	lbs	mm	inch
1	3,3	979,2	658,9	1	0,0	979,2	2161,2	1	0,0
2	6,6	389,0	261,7	1	0,0	389,0	858,5	1	0,0
3	9,8	156,0	105,0	2	0,1	234,0	516,4	2	0,1
4	13,1	73,0	49,1	3	0,1	146,0	322,2	3	0,1
5	16,4	36,0	24,2	4	0,2	90,0	198,6	3	0,1
6	19,7	15,0	10,1	3	0,1	45,0	99,3	3	0,1

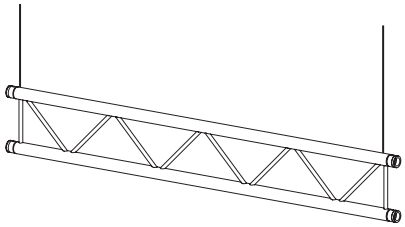

1 inch = 25,4 mm | 1m = 3.28 ft | 1 lbs = 0,453 kg

Spans must be supported at each end.
Loads must be suspended from bottom chord only.

H30L - Allowable Loading (Top chord sideways supported each metre.)

SPAN		UDL (Uniformly Distributed Load)		DEFLECTION		CPL		DEFLECTION	
m	ft	kg/m	lbs/ft	mm	inch	kgs	lbs	mm	inch
4	13,1	242,8	163,4	18	0,7	619,9	1368,1	15	0,6
5	16,4	193,7	130,3	28	1,1	516,7	1140,5	23	0,9
6	19,7	161,0	108,3	41	1,6	442,2	975,9	33	1,3
7	23,0	124,6	83,9	56	2,2	385,6	851,0	45	1,8
8	26,2	95,4	64,2	73	2,9	341,1	752,9	58	2,3
9	29,5	75,1	50,5	92	3,6	305,2	673,6	74	2,9
10	32,8	60,5	40,7	114	4,5	275,5	608,0	91	3,6
11	36,1	49,6	33,4	137	5,4	250,4	552,7	110	4,3
12	39,4	41,4	27,8	164	6,4	229,0	505,3	131	5,2

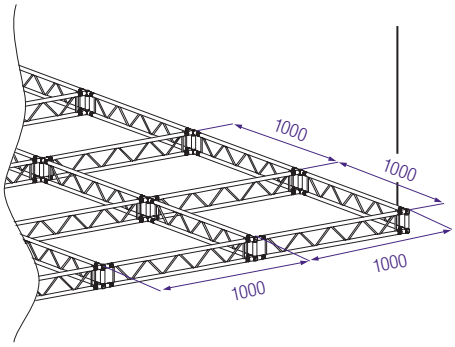

1 inch = 25,4 mm | 1m = 3.28 ft | 1 lbs = 0,453 kg

Spans must be supported at each end.
Loads must be suspended from bottom chord only.

H30L - Allowable Loading (Top chords sideways supported every 2 metres.)

SPAN		UDL (Uniformly Distributed Load)		DEFLECTION		CPL		DEFLECTION	
m	ft	kg/m	lbs/ft	mm	inch	kgs	lbs	mm	inch
4	13,1	95,2	64,1	4	0,2	190,5	420,3	4	0,1
5	16,4	60,0	40,4	7	0,3	149,9	330,9	6	0,2
6	19,7	40,8	27,5	10	0,4	122,5	270,3	8	0,3
7	23,0	29,3	19,7	14	0,5	102,5	226,1	11	0,4
8	26,2	21,8	14,7	18	0,7	87,1	192,3	14	0,6
9	29,5	16,6	11,2	23	0,9	74,9	165,3	18	0,7
10	32,8	13,0	8,7	28	1,1	64,8	143,1	22	0,9
11	36,1	10,2	6,9	34	1,3	56,4	124,4	27	1,1
12	39,4	8,2	5,5	40	1,6	49,1	108,3	32	1,3

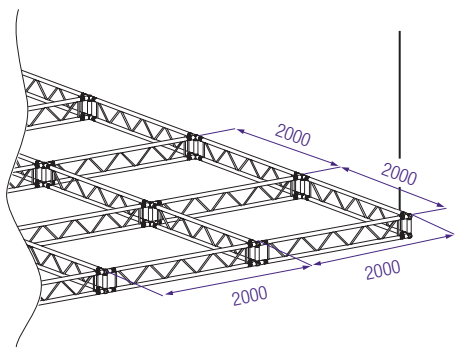

1 inch = 25,4 mm | 1m = 3.28 ft | 1 lbs = 0,453 kg

Spans must be supported at each end.
Loads must be suspended from bottom chord only.

Photo: DWR Distribution CC, South Africa. Project: JHB International Motor Show

H40 Series truss is constructed of main tubes (48,3 x 3 mm) and diagonals (20 x 2 mm), and uses the CCS6 coupling system. ProlyteStructures supplies a variety of H40 Series truss elements that provide maximum flexibility, including standard or custom-made lengths, circles and arches and several types of corners. ProlyteStructures can create custom-made pieces on request.

H40L

Top View

Side View

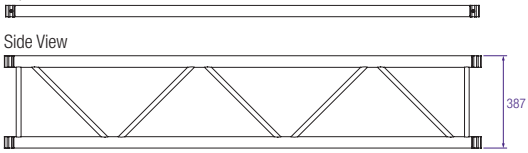

H40D

Top View

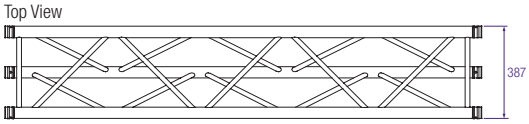

Side View

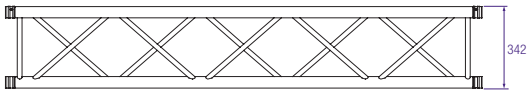

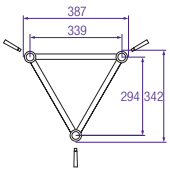

H40V

Top View

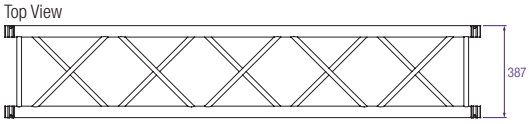

Side View

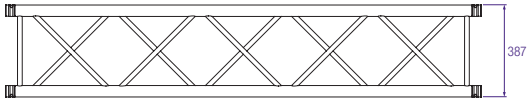

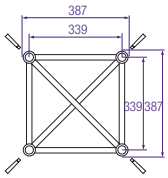

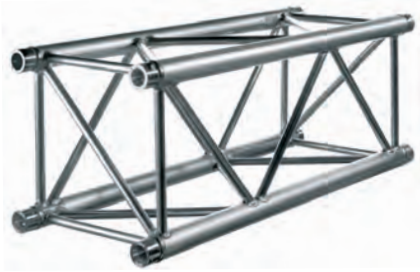

Photo: IPS, AV Network London Event , H40R truss

H40R

Top View

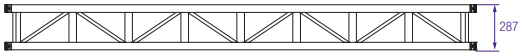

Side View

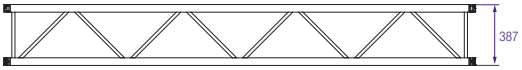

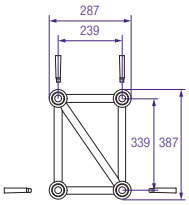

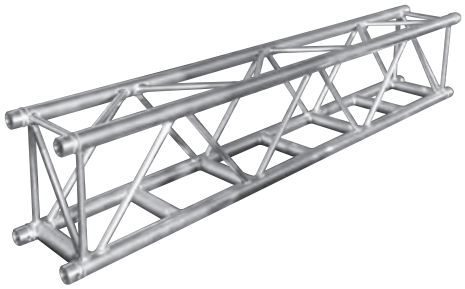

Technical Specifications - H40L, H40D, H40V, H40R	
Types	Ladder (L), Triangular (D), Square (V), Rectangular (R)
Alloy	EN AW 6082 T6
Main Tubes (Chords)	48,3 x 3 mm
Braces	20 x 2 mm
Coupling System	CCS6

Structural data can be found at www.prolyte.com

H40L, H40D, H40V - Standard available Lengths and Codes		
Metres	**Feet**	**Code***
0.25/1.00 m in 5 mm steps	0.82'/3.28', in 0.2' steps	
0,25	0.82	H40•-L025
0,50	1.90	H40•-L050
0,75	2.46	H40•-L075
0,81	2.65	H40•-L081
1,00	3.28	H40•-L100
1,50	4.57	H40•-L150
2,00	6.56	H40•-L200
2,50	8.20	H40•-L250
3,00	9.84	H40•-L300
3,50	11.48	H40•-L350
4,00	13.12	H40•-L400
4,50	14.76	H40•-L450
5,00	16.40	H40•-L500

*on • indicate L for Ladder, D for triangular or V for Square truss. Example: H40V-L200

H40D - Allowable Loading

						MAXIMUM ALLOWABLE POINT LOADS										
		Uniformly Distributed Load				Centre Point Load				Single Load Third Points Load per Point		Single Load Fourth Points Load per Point		Single Load Fifth Points Load per Point		
SPAN		UDL		DEFLECTION		CPL		DEFLECTION		TPL		QPL		FPL		SPAN
m	ft	kg/m	lbs/ft	mm	inch	kgs	lbs	mm	inch	kgs	lbs	kgs	lbs	kgs	lbs	total weight
3	9,8	724,4	487,4	9	0,4	1048,3	2313,5	8	0,3	715,6	1579,4	581,4	1283,2	451,7	996,8	15,0
4	13,1	487,6	328,1	17	0,7	824,1	1818,9	13	0,5	573,8	1266,3	446,7	985,8	352,4	777,8	20,0
5	16,4	310,4	208,9	26	1,0	677,3	1494,8	21	0,8	477,8	1054,6	361,7	798,2	288,3	636,3	25,0
6	19,7	214,2	144,1	38	1,5	573,4	1265,4	30	1,2	408,5	901,5	303,0	668,8	243,3	536,9	30,0
7	23,0	156,2	105,1	51	2,0	495,7	1094,1	41	1,6	355,9	785,4	260,0	573,8	209,9	463,2	35,0
8	26,2	118,5	79,8	64	2,5	435,3	960,7	53	2,1	314,5	694,1	226,9	500,9	184,0	406,0	40,0
9	29,5	92,7	62,4	85	3,3	386,8	853,8	68	2,7	281,0	620,2	200,7	443,0	163,3	360,4	45,0
10	32,8	74,2	50,0	104	4,1	347,0	765,8	84	3,3	253,3	558,9	179,3	395,8	146,3	323,0	50,0
11	36,1	60,6	40,8	126	5,0	313,5	691,9	101	4,0	229,8	507,3	161,5	356,5	132,1	291,6	55,0
12	39,4	50,2	33,8	150	5,9	284,9	628,9	120	4,7	209,8	463,0	146,4	323,1	120,1	265,0	60,0
13	42,6	42,1	28,3	176	6,9	260,2	574,3	141	5,6	192,3	424,5	133,4	294,3	109,6	241,9	65,0
14	45,9	35,7	24,0	205	8,1	238,5	526,4	164	6,5	177,0	390,6	122,0	269,2	100,5	221,7	70,0
15	49,2	30,5	20,5	235	9,3	219,3	484,0	188	7,4	163,3	360,5	111,9	247,1	92,4	203,9	75,0
16	52,5	26,3	17,7	267	10,5	202,1	446,0	214	8,4	151,1	333,5	103,0	227,3	85,1	187,9	80,0
17	55,8	22,7	15,3	302	11,9	186,6	411,7	241	9,5	140,0	309,0	94,9	209,5	78,6	173,5	85,0
18	59,0	19,8	13,3	338	13,3	172,4	380,6	271	10,7	129,9	286,8	87,6	193,4	72,7	160,5	90,0
19	62,3	17,3	11,6	377	14,8	159,5	352,1	302	11,9	120,7	266,3	81,0	178,7	67,3	148,5	95,0
20	65,6	15,2	10,2	417	16,4	147,6	325,8	334	13,1	112,1	247,5	74,9	165,2	62,3	137,5	100,0

1 inch = 25,4 mm | 1m = 3.28 ft | 1 lbs = 0,453 kg

- Tüv certification only valid for loading table above.
- Loading figures are only valid for static loads.
- Loading figures are only valid for single spans with supports at both ends.
- All static systems, other than single spans, need an individual structural calculation. Please contact a structural engineer or Prolyte Group for assistance.
- Loading figures are calculated according to and in full compliance with European standards (Eurocode).
- The self-weight of the trusses is already taken into account.
- Loading figures are only valid for the cross sectional orientation of the truss as shown by the icon in the loading table.
- The interaction between bending moment and shear force at the connection point is already taken into account.
- Truss spans can be assembled from different truss lengths.
- Read the manual before assembling, using and loading the truss.

H40V - Allowable Loading

						MAXIMUM ALLOWABLE POINT LOADS										
		Uniformly Distributed Load				Centre Point Load				Single Load Third Points Load per Point		Single Load Fourth Points Load per Point		Single Load Fifth Points Load per Point		
SPAN		UDL		DEFLECTION		CPL		DEFLECTION		TPL		QPL		FPL		SPAN
m	ft	kg/m	lbs/ft	mm	inch	kgs	lbs	mm	inch	kgs	lbs	kgs	lbs	kgs	lbs	total weight
3	9,8	835,4	562,1	7	0,3	2198,9	4853,1	6	0,2	1253,2	2765,8	835,4	1843,8	626,6	1382,9	20,7
4	13,1	625,0	420,6	13	0,5	1712,4	3779,2	10	0,4	1215,1	2681,7	833,4	1839,3	625,0	1379,5	27,6
5	16,4	498,8	335,6	20	0,8	1435,8	3168,9	16	0,6	994,0	2193,8	815,2	1799,1	623,5	1376,0	34,5
6	19,7	414,6	279,0	29	1,1	1234,4	2724,4	23	0,9	851,7	1879,7	676,0	1492,0	529,7	1169,0	41,4
7	23,0	354,5	238,5	40	1,6	1080,9	2385,6	32	1,2	753,5	1663,0	585,0	1291,2	462,0	1019,6	48,3
8	26,2	277,5	186,7	52	2,0	959,8	2118,3	41	1,6	674,7	1489,0	514,7	1136,0	409,1	902,8	55,2
9	29,5	218,0	146,7	65	2,6	861,7	1901,7	52	2,1	609,9	1346,1	458,7	1012,3	366,4	808,7	62,1
10	32,8	175,4	118,0	81	3,2	780,4	1722,3	65	2,5	555,7	1226,4	412,9	911,3	331,2	731,0	69,0
11	36,1	143,9	96,8	98	3,8	711,8	1570,9	78	3,1	509,5	1124,6	374,7	827,0	301,7	665,8	75,9
12	39,4	119,9	80,7	116	4,6	653,1	1441,4	93	3,7	469,7	1036,7	342,3	755,5	276,5	610,2	82,8
13	42,6	101,2	68,1	137	5,4	602,2	1328,9	109	4,3	435,0	960,0	314,4	693,9	254,7	562,1	89,7
14	45,9	86,4	58,2	158	6,2	557,5	1230,3	127	5,0	404,3	892,3	290,1	640,3	235,6	519,9	96,6
15	49,2	74,5	50,1	182	7,2	517,9	1143,0	146	5,7	377,0	832,1	268,8	593,1	218,7	482,7	103,5
16	52,5	64,7	43,5	207	8,1	482,5	1064,9	166	6,5	352,5	778,0	249,8	551,2	203,7	449,6	110,4
17	55,8	56,6	38,1	234	9,2	450,7	994,7	187	7,4	330,4	729,2	232,7	513,7	190,2	419,7	117,3
18	59,0	49,8	33,5	262	10,3	421,8	931,0	210	8,3	310,3	684,8	217,4	479,7	178,0	392,8	124,2
19	62,3	44,1	29,7	292	11,5	395,5	872,8	233	9,2	291,9	644,1	203,4	448,9	166,8	368,2	131,1
20	65,6	39,2	26,4	323	12,7	371,3	819,5	259	10,2	274,9	606,7	190,7	420,8	156,6	345,7	138,0

1 inch = 25,4 mm | 1m = 3.28 ft | 1 lbs = 0,453 kg

- Tüv certification only valid for loading table above.
- Loading figures are only valid for static loads.
- Loading figures are only valid for single spans with supports at both ends.
- All static systems, other than single spans, need an individual structural calculation. Please contact a structural engineer or Prolyte Group for assistance.
- Loading figures are calculated according to and in full compliance with European standards (Eurocode).
- The self-weight of the trusses is already taken into account.
- Loading figures are only valid for the cross sectional orientation of the truss as shown by the icon in the loading table.
- The interaction between bending moment and shear force at the connection point is already taken into account.
- Truss spans can be assembled from different truss lengths.
- Read the manual before assembling, using and loading the truss.

H40R - Allowable Loading

						MAXIMUM ALLOWABLE POINT LOADS										
		Uniformly Distributed Load				Centre Point Load				Single Load Third Points Load per Point		Single Load Fourth Points Load per Point		Single Load Fifth Points Load per Point		
SPAN		UDL		DEFLECTION		CPL		DEFLECTION		TPL		QPL		FPL		SPAN
m	ft	kg/m	lbs/ft	mm	inch	kgs	lbs	mm	inch	kgs	lbs	kgs	lbs	kgs	lbs	total weight
3	9,8	835,3	562,0	7	0,3	2198,8	4852,8	6	0,2	1252,9	2765,2	835,3	1843,4	626,5	1382,6	20.7
4	13,1	624,9	420,4	13	0,5	1712,1	3778,7	10	0,4	1214,9	2681,3	833,1	1838,7	624,9	1379,1	27.6
5	16,4	498,6	335,5	20	0,8	1435,5	3168,2	16	0,6	993,8	2193,4	815,0	1798,7	623,3	1375,5	34.5
6	19,7	414,4	278,9	29	1,1	1234,1	2723,6	23	0,9	851,5	1879,2	675,8	1491,5	529,5	1168,7	41.4
7	23,0	354,3	238,4	40	1,6	1080,5	2384,6	32	1,2	753,2	1662,4	584,8	1290,6	461,8	1019,1	48.3
8	26,2	277,3	186,6	52	2,0	959,3	2117,1	41	1,6	674,4	1488,3	514,4	1135,3	408,8	902,3	55.2
9	29,5	217,8	146,5	65	2,6	861,0	1900,3	52	2,1	609,5	1345,3	458,3	1011,6	366,1	808,1	62.1
10	32,8	175,2	117,9	81	3,2	779,7	1720,7	65	2,5	555,3	1225,4	412,5	910,4	330,9	730,4	69.0
11	36,1	143,7	96,7	98	3,8	711,0	1569,2	78	3,1	509,0	1123,4	374,3	826,0	301,3	665,1	75.9
12	39,4	119,7	80,5	116	4,6	652,2	1439,4	93	3,7	469,2	1035,4	341,8	754,4	276,1	609,3	82.8
13	42,6	101,1	68,0	137	5,4	601,2	1326,8	109	4,3	434,3	958,6	313,9	692,7	254,3	561,1	89.7
14	45,9	86,3	58,0	158	6,2	556,4	1228,0	127	5,0	403,6	890,8	289,6	639,1	235,1	519,0	96.6
15	49,2	74,3	50,0	182	7,2	516,7	1140,4	146	5,7	376,3	830,4	268,1	591,8	218,2	481,7	103.5
16	52,5	64,5	43,4	207	8,1	481,3	1062,2	166	6,5	351,7	776,2	249,1	549,7	203,2	448,4	110.4
17	55,8	56,4	38,0	234	9,2	449,3	991,7	187	7,4	329,5	727,3	232,0	512,1	189,6	418,5	117.3
18	59,0	49,7	33,4	262	10,3	420,4	927,8	210	8,3	309,3	682,7	216,6	478,1	177,4	391,4	124,2
19	62,3	43,9	29,5	292	11,5	394,0	869,5	233	9,2	290,9	641,9	202,6	447,2	166,2	366,8	131,1
20	65,6	39,0	26,2	323	12,7	369,7	816,0	259	10,2	273,9	604,4	189,8	418,9	156,0	344,2	138

1 inch = 25,4 mm | 1m = 3.28 ft | 1 lbs = 0,453 kg

- Tüv certification only valid for loading table above.
- Loading figures are only valid for static loads.
- Loading figures are only valid for single spans with supports at both ends.
- All static systems, other than single spans, need an individual structural calculation. Please contact a structural engineer or Prolyte Group for assistance.
- Loading figures are calculated according to and in full compliance with European standards (Eurocode).
- The self-weight of the trusses is already taken into account.
- Loading figures are only valid for the cross sectional orientation of the truss as shown by the icon in the loading table.
- The interaction between bending moment and shear force at the connection point is already taken into account.
- Truss spans can be assembled from different truss lengths.
- Read the manual before assembling, using and loading the truss.

H40R - Standard available Lengths and Codes

Metres	Feet	Code*
0.25/1.00 m in 5 mm steps	0.82'/3.28', in 0.2' steps	
0,25	0.83	H40R-L025
0,50	1.90	H40R-L050
0,75	2.46	H40R-L075
1,00	3.28	H40R-L100
1,50	4.57	H40R-L150
2,00	6.56	H40R-L200
2,50	8.20	H40R-L250
3,00	9.84	H40R-L300
3,50	11.48	H40R-L350
4,00	13.12	H40R-L400

H40L - Allowable Loading (Span supported on top chord.)

SPAN		Uniformly Distributed Load UDL		DEFLECTION		CPL		DEFLECTION	
m	ft	kg/m	lbs/ft	mm	inch	kgs	lbs	mm	inch
1	3,3	1259,8	847,7	1	0,0	1259,8	2780,4	0	0,0
2	6,6	629,0	423,2	1	0,0	629,0	1388,2	1	0,0
3	9,8	253,0	170,2	2	0,1	380,0	838,7	1	0,1
4	13,1	105,0	70,7	2	0,1	210,0	463,5	2	0,1
5	16,4	52,0	35,0	3	0,1	130,0	286,9	2	0,1
6	19,7	24,0	16,1	3	0,1	72,0	158,9	2	0,1

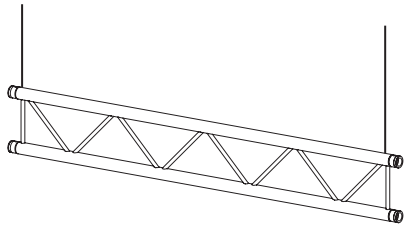

1 inch = 25,4 mm | 1m = 3.28 ft | 1 lbs = 0,453 kg

Spans must be supported at each end.
Loads must be suspended from bottom chord only.

H40L - Allowable Loading (Top chord sideways supported each metre.)

SPAN		Uniformly Distributed Load UDL		DEFLECTION		CPL		DEFLECTION	
m	ft	kg/m	lbs/ft	mm	inch	kgs	lbs	mm	inch
4	13,1	312,9	210,6	13	0,5	806,8	1780,5	10	0,4
5	16,4	249,8	168,1	20	0,8	682,7	1506,7	16	0,6
6	19,7	207,7	139,8	29	1,1	590,9	1304,1	23	0,9
7	23,0	173,4	116,7	40	1,6	520,2	1148,0	32	1,2
8	26,2	133,7	90,0	52	2,0	463,9	1023,7	41	1,6
9	29,5	106,0	71,3	65	2,6	417,9	922,4	52	2,1
10	32,8	85,8	57,7	81	3,2	379,7	838,0	65	2,5
11	36,1	70,8	47,6	98	3,8	347,3	766,5	78	3,1
12	39,4	59,2	39,9	116	4,6	319,5	705,1	93	3,7

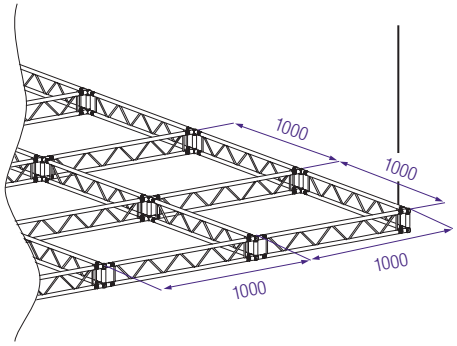

1 inch = 25,4 mm | 1m = 3.28 ft | 1 lbs = 0,453 kg

Spans must be supported at each end.
Loads must be suspended from bottom chord only.

H40L - Allowable Loading (Top chords sideways supported every 2 metres.)

SPAN		Uniformly Distributed Load UDL		DEFLECTION		CPL		DEFLECTION	
m	ft	kg/m	lbs/ft	mm	inch	kgs	lbs	mm	inch
4	13,1	156,2	105,1	4	0,1	312,5	689,6	3	0,1
5	16,4	99,0	66,6	6	0,2	247,5	546,3	5	0,2
6	19,7	67,9	45,7	8	0,3	203,8	449,8	7	0,3
7	23,0	49,2	33,1	11	0,4	172,2	380,0	9	0,3
8	26,2	37,0	24,9	14	0,6	148,1	326,9	12	0,5
9	29,5	28,7	19,3	18	0,7	129,1	285,0	15	0,6
10	32,8	22,7	15,3	23	0,9	113,6	250,8	18	0,7
11	36,1	18,3	12,3	27	1,1	100,7	222,3	22	0,9
12	39,4	15,0	10,1	33	1,3	89,8	198,1	26	1,0

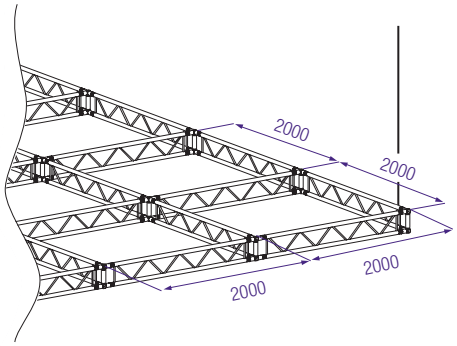

1 inch = 25,4 mm | 1m = 3.28 ft | 1 lbs = 0,453 kg

Spans must be supported at each end.
Loads must be suspended from bottom chord only.

Photo: Italstage, Italy.

System characteristics

The ProlyteStructures Heavy-Duty truss product line consists of the S and B Series, ranging from the S36 to the B100 truss, all available in several profiles. The S and B Series are designed as robust truss systems, with thick-walled chords, heavy-duty bracing and an exceptionally strong coupler system.

The main characteristics of the Heavy-Duty truss are relative compactness and ultimate strength, while a user-friendly design, durability and unrivalled loading capacities make ProlyteStructures Heavy-Duty truss a flexible and reliable choice for many events.

System applications

The Heavy-Duty trusses are the ultimate solution for structures that have to meet high load-bearing demands and are subjected to frequent use, for example when functioning as a supporting structure or overhead rig for more complex constructions.

Their robust features make them suitable for outdoor use as well as indoor applications. The S and B Series are mainly used in the rental, staging, event and exhibition markets.

Coupling system

ProlyteStructures S and B Series Heavy-Duty trusses use the CCS7 conical coupling system. The CCS7 allows fast, efficient and reliable coupling of trusses and corners.

Photo: Prolyte Group. Project: Amusement park, Germany.

S36 Series truss is constructed of main tubes (50 x 4 mm) and diagonals (25 x 3 mm), and uses the CCS7 coupling system. ProlyteStructures supplies a variety of S36 truss elements that provide maximum flexibility, including standard or custom-made lengths, circles and arches and several types of corners.

ProlyteStructures can create custom-made pieces on request. The S36V has 4-sided diagonal webbing and can therefore handle vertical as well as horizontal loads. The S36R can handle only vertical loading.
Thanks to the clever spigot pin orientation in the couplers, assembly of the truss is easy.

S36R

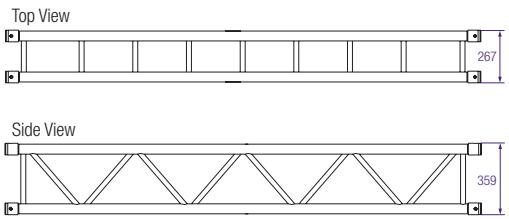

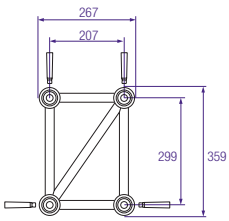

S36V

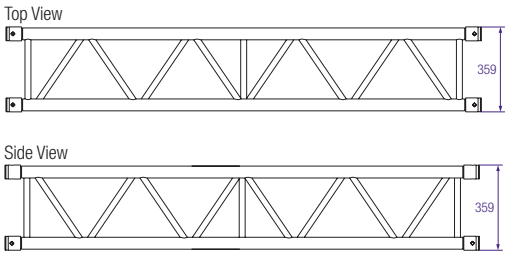

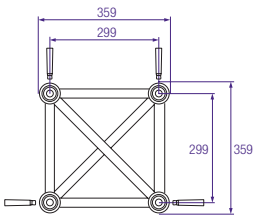

S36R - Allowable Loading

						MAXIMUM ALLOWABLE POINT LOADS										
		Uniformly Distributed Load				Centre Point Load				Single Load Third Points Load per Point		Single Load Fourth Points Load per Point		Single Load Fifth Points Load per Point		
SPAN		UDL		DEFLECTION		CPL		DEFLECTION		TPL		QPL		FPL		SPAN
m	ft	kg/m	lbs/ft	mm	inch	kgs	lbs	mm	inch	kgs	lbs	kgs	lbs	kgs	lbs	total weight
3	9,8	1533,6	1031,9	8	0,3	2270,5	5011,1	7	0,3	1471,3	3247,1	1167,6	2576,9	979,3	2161,4	31,5
4	13,1	1147,8	772,3	15	0,6	1874,3	4136,6	12	0,5	1217,2	2686,4	996,5	2199,2	822,7	1815,8	42,0
5	16,4	863,7	581,1	23	0,9	1593,3	3516,5	18	0,7	1055,9	2330,3	881,6	1945,7	693,7	1531,0	52,5
6	19,7	596,9	401,6	33	1,3	1383,3	3052,9	26	1,0	930,9	2054,6	780,4	1722,4	598,6	1321,0	63,0
7	23,0	436,0	293,4	45	1,8	1219,9	2692,3	36	1,4	831,2	1834,4	678,0	1496,3	525,4	1159,6	73,5
8	26,2	331,6	223,1	58	2,3	1088,9	2403,2	47	1,8	749,5	1654,1	598,0	1319,8	467,3	1031,2	84,0
9	29,5	260,0	175,0	74	2,9	981,3	2165,7	59	2,3	681,2	1503,5	533,7	1177,9	419,8	926,5	94,5
10	32,8	208,8	140,5	91	3,6	891,1	1966,7	73	2,9	623,2	1375,5	480,8	1061,1	380,3	839,3	105,0
11	36,1	170,9	115,0	111	4,4	814,3	1797,1	88	3,5	573,3	1265,2	436,4	963,1	346,8	765,4	115,5
12	39,4	142,1	95,6	132	5,2	747,9	1650,6	105	4,1	529,6	1168,9	398,5	879,4	318,0	701,8	126,0
13	42,6	119,7	80,5	154	6,1	689,8	1522,5	124	4,9	491,2	1084,0	365,7	807,0	292,9	646,4	136,5
14	45,9	101,9	68,6	179	7,0	638,5	1409,2	143	5,6	456,9	1008,4	336,9	743,6	270,8	597,7	147,0
15	49,2	87,6	58,9	206	8,1	592,7	1308,1	164	6,5	426,2	940,6	311,5	687,6	251,1	554,3	157,5
16	52,5	75,8	51,0	234	9,2	551,5	1217,2	187	7,4	398,4	879,2	288,9	637,5	233,5	515,3	168,0
17	55,8	66,1	44,5	264	10,4	514,2	1134,8	211	8,3	373,0	823,2	268,4	592,5	217,6	480,1	178,5
18	59,0	57,9	39,0	296	11,7	480,1	1059,6	237	9,3	349,8	772,0	249,9	551,6	203,0	448,1	189,0
19	62,3	51,0	34,3	330	13,0	448,9	990,7	264	10,4	328,4	724,7	233,0	514,3	189,8	418,8	199,5
20	65,6	45,1	30,4	365	14,4	420,0	927,0	292	11,5	308,6	681,0	217,5	480,1	177,5	391,8	210,0

1 inch = 25,4 mm | 1m = 3.28 ft | 1 lbs = 0,453 kg

- Tüv certification only valid for loading table above.
- Loading figures are only valid for static loads.
- Loading figures are only valid for single spans with supports at both ends.
- All static systems, other than single spans, need an individual structural calculation. Please contact a structural engineer or Prolyte Group for assistance.
- Loading figures are calculated according to and in full compliance with European standards (Eurocode).
- The self-weight of the trusses is already taken into account.
- Loading figures are only valid for the cross sectional orientation of the truss as shown by the icon in the loading table.
- The interaction between bending moment and shear force at the connection point is already taken into account.
- Truss spans can be assembled from different truss lengths.
- Read the manual before assembling, using and loading the truss.

Technical Specifications - S36 Series

Types	Rectangular (R), Square (V)
Alloy	EN AW 6082 T6
Main Tubes (Chords)	50 x 4 mm
Braces	25 x 3 mm
Coupling System	CCS7

Structural data can be found at www.prolyte.com

S36 Series - Standard available Lengths and Codes

Metres	Feet	Code*
0,50	1.64	S36•-L050
0,60	1.97	S36•-L060
0,80	2.62	S36•-L080
1,00	3.28	S36•-L100
1,20	3.94	S36•-L120
1,50	4.92	S36•-L150
1,60	5.25	S36•-L160
2,00	6.56	S36•-L200
2,40	7.87	S36•-L240
2,50	8.20	S36•-L250
3,00	9.84	S36•-L300
3,20	10.50	S36•-L320
3,50	11.48	S36•-L350
4,00	13.12	S36•-L400

*on • indicate R for Rectangular, V for Square truss.

Example: S36V-L200

S36V - Allowable Loading

						MAXIMUM ALLOWABLE POINT LOADS										
		Uniformly Distributed Load				Centre Point Load				Single Load Third Points Load per Point		Single Load Fourth Points Load per Point		Single Load Fifth Points Load per Point		
SPAN		UDL		DEFLECTION		CPL		DEFLECTION		TPL		QPL		FPL		SPAN
m	ft	kg/m	lbs/ft	mm	inch	kgs	lbs	mm	inch	kgs	lbs	kgs	lbs	kgs	lbs	total weight
3	9,8	1532,2	1031,0	8	0,3	2269,7	5009,3	7	0,3	1470,7	3245,8	1167,0	2575,6	978,8	2160,1	36,0
4	13,1	1146,5	771,4	15	0,6	1873,0	4133,7	12	0,5	1216,4	2684,5	995,6	2197,4	822,1	1814,3	48,0
5	16,4	862,3	580,2	23	0,9	1591,5	3512,5	18	0,7	1054,7	2327,7	880,4	1943,1	692,8	1528,9	60,0
6	19,7	595,5	400,7	33	1,3	1380,8	3047,5	26	1,0	929,4	2051,2	778,9	1719,0	597,4	1318,5	72,0
7	23,0	434,7	292,5	45	1,8	1216,9	2685,6	36	1,4	829,2	1830,1	676,1	1492,1	524,0	1156,5	84,0
8	26,2	330,3	222,2	58	2,3	1085,3	2395,2	47	1,8	747,2	1649,0	595,8	1314,9	465,6	1027,5	96,0
9	29,5	258,7	174,1	74	2,9	977,0	2156,3	59	2,3	678,5	1497,5	531,2	1172,3	417,9	922,3	108,0
10	32,8	207,5	139,6	91	3,6	886,2	1955,8	73	2,9	620,1	1368,6	477,9	1054,8	378,1	834,5	120,0
11	36,1	169,6	114,1	111	4,4	808,7	1784,8	88	3,5	569,7	1257,3	433,2	956,0	344,4	760,0	132,0
12	39,4	140,8	94,7	132	5,2	741,7	1636,9	105	4,1	525,7	1160,1	394,9	871,6	315,3	695,8	144,0
13	42,6	118,4	79,6	154	6,1	682,9	1507,2	124	4,9	486,7	1074,2	361,8	798,5	289,9	639,8	156,0
14	45,9	100,6	67,7	179	7,0	630,9	1392,5	143	5,6	452,0	997,7	332,7	734,3	267,5	590,4	168,0
15	49,2	86,2	58,0	206	8,1	584,5	1289,9	164	6,5	420,8	928,8	307,0	677,5	247,6	546,4	180,0
16	52,5	74,5	50,1	234	9,2	542,6	1197,5	187	7,4	392,6	866,4	284,0	626,7	229,7	506,9	192,0
17	55,8	64,7	43,6	264	10,4	504,5	1113,5	211	8,3	366,7	809,4	263,2	580,9	213,5	471,1	204,0
18	59,0	56,6	38,1	296	11,7	469,8	1036,8	237	9,3	343,0	757,1	244,3	539,3	198,7	438,4	216,0
19	62,3	49,7	33,4	330	13,0	437,8	966,3	264	10,4	321,1	708,7	227,1	501,2	185,1	408,5	228,0
20	65,6	43,8	29,5	365	14,4	408,3	901,1	292	11,5	300,8	663,9	211,2	466,2	172,6	380,9	240,0

1 inch = 25,4 mm | 1m = 3.28 ft | 1 lbs = 0,453 kg

- Tüv certification only valid for loading table above.
- Loading figures are only valid for static loads.
- Loading figures are only valid for single spans with supports at both ends.
- All static systems, other than single spans, need an individual structural calculation. Please contact a structural engineer or Prolyte Group for assistance.
- Loading figures are calculated according to and in full compliance with European standards (Eurocode).
- The self-weight of the trusses is already taken into account.
- Loading figures are only valid for the cross sectional orientation of the truss as shown by the icon in the loading table.
- The interaction between bending moment and shear force at the connection point is already taken into account.
- Truss spans can be assembled from different truss lengths.
- Read the manual before assembling, using and loading the truss.

Photo: Flashlight Rental bv, The Netherlands

The S36PRF and S36PRA have measurements of 360 mm height and 610 mm width and are available in different lengths. The truss has fixed cross and linear braces on the topside; the diameter is 50x4 mm for the main chords and 25x3 mm for the diagonals and cross brace. The truss can be stacked with or without the dolly. Both the truss and the dolly types are compatible and can be interchanged. Flexible cross braces in the topside of the S36PRA make it possible to mount the fixtures or bars at any required place. These braces are equipped with M12 sliding slots to facilitate placing.
The stackable dollies guarantee easy handling; one person can do stacking, tipping and connection of the legs. The dolly has foldable bumpers to improve side protection.

PreRigTruss Fixed type - S36PRF + Dolly - S36PRD2

Side View

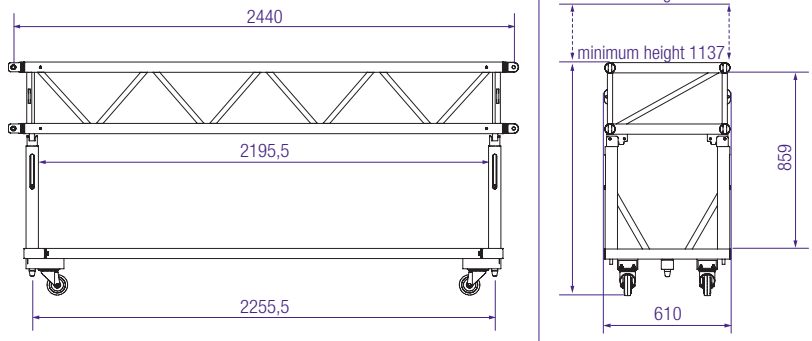

PreRigTruss Flexible type - S36PRA + WingDolly - S36PRD1

Side View

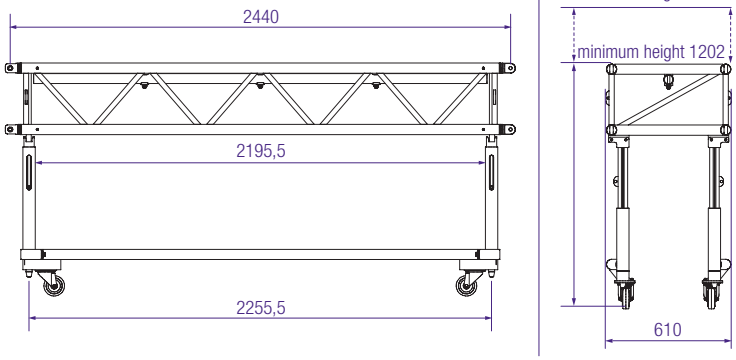

The pin-fork connection can rotate to create vertical and horizontal corners, making it possible to build spans as well as goalpost or grid configurations.

S36 PRT- Allowable Loading

						MAXIMUM ALLOWABLE POINT LOADS											
		Uniformly Distributed Load				Centre Point Load				Single Load Third Points Load per Point		Single Load Fourth Points Load per Point		Single Load Fifth Points Load per Point			
SPAN		UDL		DEFLECTION		CPL		DEFLECTION		TPL		QPL		FPL		WEIGHT	
m	ft	kg/m	lbs/ft	mm	inch	kgs	lbs	mm	inch	kgs	lbs	kgs	lbs	kgs	lbs	kgs	lbs
4.00	13.1	1200.6	807.8	13	0.5	2436.5	5377.3	11	0.4	1827.3	4033.0	1218.2	2688.6	1015.2	2240.5	96.7	213.0
5.00	16.4	770.2	518.3	21	0.8	1925.6	4249.8	17	0.7	1444.2	3187.3	962.8	2124.9	802.3	1770.7	122.9	270.7
6.00	19.7	526.9	354.5	30	1.2	1580.6	3488.5	24	1.0	1185.5	2616.4	790.3	1744.2	658.6	1453.5	149.1	328.4
7.00	23.0	380.1	255.8	41	1.6	1330.5	2936.4	33	1.3	997.9	2202.3	665.3	1468.2	554.4	1223.5	175.3	386.1
8.00	26.2	284.9	191.7	53	2.1	1139.6	2515.2	44	1.7	854.7	1886.4	569.8	1257.6	474.8	1048.0	201.5	443.8
9.00	29.5	219.6	147.8	67	2.7	988.3	2181.1	55	2.2	741.2	1635.8	494.1	1090.5	411.8	908.8	227.7	501.5
10.00	32.8	172.9	116.3	83	3.3	864.5	1908.1	69	2.7	648.4	1431.0	432.3	954.0	360.2	795.0	253.9	559.3
11.00	36.1	138.4	93.1	101	4.0	760.9	1679.4	84	3.3	570.7	1259.5	380.5	839.7	317.1	699.7	280.1	617.0
12.00	39.4	112.1	75.4	120	4.7	672.4	1484.0	101	4.0	504.3	1113.0	336.2	742.0	280.2	618.3	306.3	674.7
13.00	42.6	91.6	61.6	141	5.5	595.5	1314.3	119	4.7	446.6	985.7	297.8	657.1	248.1	547.6	332.5	732.4
14.00	45.9	75.4	50.7	163	6.4	527.7	1164.6	139	5.5	395.8	873.5	263.9	582.3	219.9	485.3	358.7	790.1
15.00	49.2	62.3	41.9	187	7.4	467.2	1031.1	161	6.3	350.4	773.3	233.6	515.6	194.7	429.6	384.9	847.8
16.00	52.5	51.6	34.7	213	8.4	412.6	910.6	185	7.3	309.5	683.0	206.3	455.3	171.9	379.4	411.1	905.5
17.00	55.8	42.7	28.7	241	9.5	362.9	801.0	211	8.3	272.2	600.7	181.5	400.5	151.2	333.7	437.3	963.2
18.00	59.0	35.3	23.7	270	10.6	317.3	700.2	239	9.4	238.0	525.2	158.6	350.1	132.2	291.8	463.5	1020.9
19.00	62.3	29.0	19.5	301	11.8	275.1	607.1	269	10.6	206.3	455.3	137.5	303.5	114.6	253.0	489.7	1078.6
20.00	65.6	23.6	15.9	333	13.1	235.8	520.4	302	11.9	176.8	390.3	117.9	260.2	98.2	216.8	515.9	1136.3

1 inch = 25,4 mm | 1m = 3.28 ft | 1 lbs = 0,453 kg

WHEN DOLLIES ARE NOT MOUNTED ON THE TRUSS THE LOADING COULD BE INCREASED WITH 12 KG PER METER

- Tüv certification only valid for loading table above.
- Loading figures are only valid for static loads.
- Loading figures are only valid for single spans with supports at both ends.
- All static systems, other than single spans, need an individual structural calculation. Please contact a structural engineer or Prolyte Group for assistance.
- Loading figures are calculated according to and in full compliance with European standards (Eurocode).
- The self-weight of the trusses is already taken into account.
- Loading figures are only valid for the cross sectional orientation of the truss as shown by the icon in the loading table.
- The interaction between bending moment and shear force at the connection point is already taken into account.
- Truss spans can be assembled from different truss lengths.
- Read the manual before assembling, using and loading the truss.

Technical Specifications - PreRigTruss	
Types	Pre rig
Alloy	EN AW 6082 T6
Main Tubes (Chords)	50 x 4 mm
Braces	25 x 3 mm
Coupling System	Rotatable Pin/fork

Structural data can be found at www.prolyte.com

CATALOGUS CODE	DESCRIPTION	WEIGHT
S36PRF-L122	PreRigTruss, fixed, length 4ft	28 kg
S36PRF-L244	PreRigTruss, fixed, length 8ft	36 kg
S36PRF-L305	PreRigTruss, fixed, length 10ft	43 kg
S36PRA-L122	PreRigTruss, flexable, length 4ft	23 kg
S36PRA-L244	PreRigTruss, flexable, length 8ft	35 kg
S36PRA-L305	PreRigTruss, flexable, length 10ft	42 kg
S36PRD1-L122	Dolly for S36PR truss, wing type, length 4ft	12.5 kg
S36PRD1-L244	Dolly for S36PR truss, wing type, length 8ft	13.5 kg
S36PRD1-L305	Dolly for S36PR truss, wing type, length 10ft	14.5 kg
S36PRD2-L122	Dolly for S36PR truss, length 4ft	34 kg
S36PRD2-L244	Dolly for S36PR truss, length 8ft	38 kg
S36PRD2-L305	Dolly for S36PR truss, length 10ft	40 kg
S36PRA-T-122	extra tube for PRT 2 4ft incl bolts and nuts	2.4 kg
S36PRA-T-244	extra tube for PRT 2 8ft incl bolts and nuts	4 kg
S36PRA-T-305	extra tube for PRT 2 10ft incl bolts and nuts	4.9 kg
	pins to connect trusses (4 per type needed)	
ACC-LP-16	LOCKING PIN FOR CCS6-HINGE	
CCS7-705	SPIGOT R-SPRING, CCS 700	
ACC-LP-10	removable pin with clip for legs dollies	

Photo: Prolyte Group. Project: Amusement park, Germany.

S52 Series truss is constructed of main tubes (50 x 4 mm) and diagonals (25 x 3 mm) (S52F) or 30 x 3mm (S52V and SV), and uses the CCS7 coupling system. ProlyteStructures supplies a variety of S52 Series truss elements that provide maximum flexibility, including standard or custom-made lengths, circles and arches and several types of corners. ProlyteStructures can create custom-made pieces on request. For obvious reasons, the S52F is not available in curved sections.

The S52SV has 4-sided diagonal webbing and can therefore handle vertical as well as horizontal loads. The S52V/S52F can only handle vertical loading. The S52F folding truss can save up to 70-80% of warehouse and truck space, while the smart placing of the hinges reduces the risk of hand and finger injuries. Thanks to the clever spigot pin orientation in the couplers, assembly of the truss is easy.

S52SV - S52V

Top View S52SV

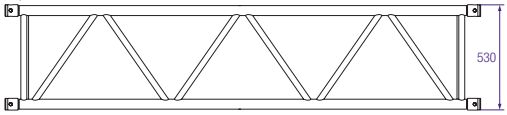

Top View S52V

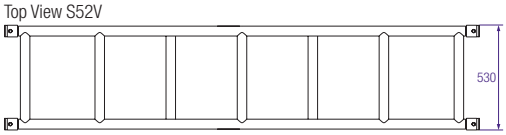

Side View S52SV - S52V

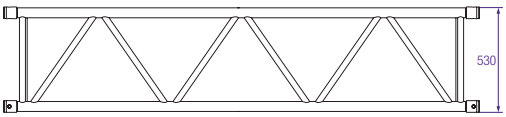

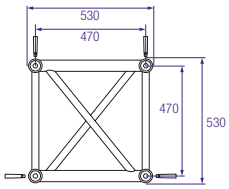

S52F

Top View

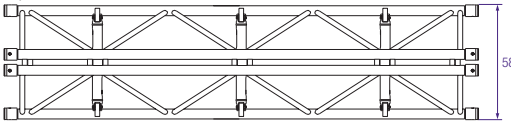

Side View

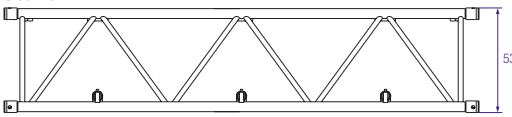

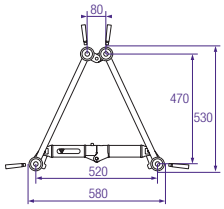

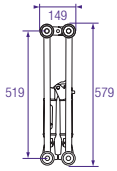

S52SV

S52V

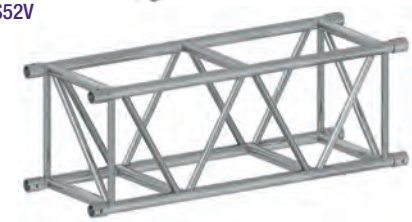

S52F

S52F - Allowable Loading

						MAXIMUM ALLOWABLE POINT LOADS										
		Uniformly Distributed Load				Centre Point Load				Single Load Third Points Load per Point		Single Load Fourth Points Load per Point		Single Load Fifth Points Load per Point		
SPAN		UDL		DEFLECTION		CPL		DEFLECTION		TPL		QPL		FPL		SPAN
m	ft	kg/m	lbs/ft	mm	inch	kgs	lbs	mm	inch	kgs	lbs	kgs	lbs	kgs	lbs	total weight
2,4	7,9	1049,2	706,0	3	0,1	2060,3	4547,1	2	0,1	1030,2	2273,6	686,8	1515,7	515,1	1136,8	28,8
3,6	11,8	697,5	469,3	7	0,3	1895,7	4183,8	5	0,2	1027,2	2267,1	684,8	1511,4	513,6	1133,6	43,2
4,8	15,7	663,9	446,7	12	0,5	1574,1	3474,0	10	0,4	983,7	2170,9	655,8	1447,3	486,7	1074,1	57,6
6,0	19,7	529,6	356,4	19	0,7	1253,4	2766,3	15	0,6	940,1	2074,8	626,7	1383,2	459,7	1014,6	72
7,2	23,6	432,7	291,2	27	1,1	1038,6	2292,2	22	0,8	778,9	1719,1	519,3	1146,1	432,7	955,1	86,4
8,4	27,6	357,9	240,8	37	1,4	884,2	1951,4	29	1,2	663,2	1463,6	442,1	975,7	368,4	813,1	100,8
9,6	31,5	303,8	204,4	48	1,9	767,6	1694,1	38	1,5	575,7	1270,6	383,8	847,1	319,8	705,9	115,2
10,8	35,4	237,9	160,1	61	2,4	743,8	1641,6	49	1,9	557,9	1231,2	371,9	820,8	309,9	684,0	129,6
12,0	39,4	200,8	135,1	75	2,9	722,9	1595,4	60	2,4	542,2	1196,6	361,5	797,7	301,2	664,8	144
13,2	43,3	164,1	110,4	91	3,6	703,9	1553,5	72	2,9	527,9	1165,1	352,0	776,8	293,3	647,3	158,4
14,4	47,2	136,1	91,6	108	4,2	686,2	1514,4	86	3,4	514,6	1135,8	343,1	757,2	285,9	631,0	172,8
15,6	51,2	114,4	77,0	126	5,0	624,7	1378,7	101	4,0	468,5	1034,0	312,3	689,3	260,3	574,4	187,2
16,8	55,1	97,2	65,4	147	5,8	571,3	1260,9	117	4,6	428,5	945,7	285,7	630,4	238,0	525,4	201,6
18,0	59,0	83,2	56,0	168	6,6	561,9	1240,2	135	5,3	421,4	930,1	281,0	620,1	234,1	516,7	216
19,2	63,0	71,9	48,4	192	7,5	551,9	1218,0	153	6,0	413,9	913,5	275,9	609,0	229,9	507,5	230,4
20,4	66,9	62,4	42,0	216	8,5	509,3	1124,1	173	6,8	382,0	843,1	254,7	562,1	212,2	468,4	244,8
21,6	70,8	54,5	36,7	242	9,5	471,0	1039,4	194	7,6	353,2	779,6	235,5	519,7	196,2	433,1	259,2

1 inch = 25,4 mm | 1m = 3.28 ft | 1 lbs = 0,453 kg

- Tüv certification only valid for loading table above.
- Loading figures are only valid for static loads.
- Loading figures are only valid for single spans with supports at both ends.
- All static systems, other than single spans, need an individual structural calculation. Please contact a structural engineer or Prolyte Group for assistance.
- Loading figures are calculated according to and in full compliance with European standards (Eurocode).
- The self-weight of the trusses is already taken into account.
- Loading figures are only valid for the cross sectional orientation of the truss as shown by the icon in the loading table.
- The interaction between bending moment and shear force at the connection point is already taken into account.
- Truss spans can be assembled from different truss lengths.
- Read the manual before assembling, using and loading the truss.

Technical Specifications - S52 Series	
Types	Folding (F), Square (V)
Alloy	EN AW 6082 T6
Main Tubes (Chords)	50 x 4 mm
Braces	S52F - 25 x 3 mm S52V/SV - 30 x 3 mm
Coupling System	CCS7

Structural data can be found at www.prolyte.com

S52V / S52SV / S52F - Standard available Lengths and Codes			
Metres	**Feet**	**Code***	
0,60	1.97	S52•-L060	S52F-L060
0,80	2.62	S52•-L080	S52F-L080
1,00	3.28	S52•-L100	
1,20	3.94	S52•-L120	S52F-L120
1,50	4.57	S52•-L150	
1,60	5.25	S52•-L160	S52F-L160
2,00	6.56	S52•-L200	
2,40	7.87	S52•-L240	S52F-L240
2,50	8.20	S52•-L250	
3,00	9.84	S52•-L300	
3,20	10.50	S52•-L320	
4,00	13.12	S52•-L400	

*on • indicate V for Square and SV for Square truss with 4-sided webbing. Example: S52V-L200

S52V - Allowable Loading

						MAXIMUM ALLOWABLE POINT LOADS										
		Uniformly Distributed Load				Centre Point Load				Single Load Third Points Load per Point		Single Load Fourth Points Load per Point		Single Load Fifth Points Load per Point		
SPAN		UDL		DEFLECTION		CPL		DEFLECTION		TPL		QPL		FPL		SPAN
m	ft	kg/m	lbs/ft	mm	inch	kgs	lbs	mm	inch	kgs	lbs	kgs	lbs	kgs	lbs	total weight
3	9,8	1880,2	1265,1	5	0,2	2962,7	6538,7	4	0,2	1863,5	4112,8	1410,7	3113,4	1144,2	2525,2	45,0
4	13,1	1406,8	946,6	9	0,4	2526,0	5574,9	7	0,3	1584,5	3496,9	1239,4	2735,3	1028,6	2270,1	60,0
5	16,4	1122,7	755,5	14	0,5	2198,7	4852,4	11	0,4	1394,6	3078,0	1115,6	2462,2	931,1	2055,0	75,0
6	19,7	895,7	602,7	20	0,8	1943,7	4289,6	16	0,6	1254,9	2769,7	1020,4	2252,0	854,2	1885,1	90,0
7	23,0	654,5	440,4	27	1,1	1738,9	3837,8	22	0,9	1139,2	2514,2	938,8	2072,0	759,5	1676,3	105,0
8	26,2	497,9	335,0	36	1,4	1570,6	3466,3	29	1,1	1041,5	2298,6	868,0	1915,6	682,6	1506,5	120,0
9	29,5	390,6	262,8	45	1,8	1429,4	3154,7	36	1,4	957,8	2113,9	805,7	1778,3	618,6	1365,3	135,0
10	32,8	313,8	211,2	56	2,2	1309,1	2889,1	45	1,8	885,2	1953,6	733,5	1618,8	564,6	1246,0	150,0
11	36,1	257,0	172,9	68	2,7	1205,0	2659,5	54	2,1	821,4	1812,9	668,8	1476,0	518,1	1143,5	165,0
12	39,4	213,8	143,9	80	3,2	1114,0	2458,6	64	2,5	764,9	1688,1	613,2	1353,3	477,8	1054,4	180,0
13	42,6	180,2	121,2	94	3,7	1033,5	2281,0	76	3,0	714,3	1576,5	564,8	1246,4	442,2	976,0	195,0
14	45,9	153,5	103,3	109	4,3	961,7	2122,5	88	3,4	668,7	1475,9	522,1	1152,4	410,7	906,4	210,0
15	49,2	132,0	88,8	126	4,9	897,1	1979,9	101	4,0	627,4	1384,6	484,3	1068,8	382,5	844,1	225,0
16	52,5	114,4	76,9	143	5,6	838,5	1850,7	114	4,5	589,6	1301,2	450,3	993,9	357,0	787,8	240,0
17	55,8	99,8	67,1	161	6,4	785,1	1732,8	129	5,1	554,9	1224,6	419,7	926,2	333,8	736,7	255,0
18	59,0	87,5	58,9	181	7,1	736,1	1624,6	145	5,7	522,8	1153,8	391,8	864,6	312,6	689,9	270,0
19	62,3	77,2	51,9	202	7,9	690,9	1524,8	161	6,4	493,0	1088,0	366,2	808,3	293,1	646,9	285,0
20	65,6	68,3	46,0	223	8,8	648,9	1432,2	179	7,0	465,2	1026,7	341,7	754,0	275,1	607,1	300,0

1 inch = 25,4 mm | 1m = 3.28 ft | 1 lbs = 0,453 kg

- Tüv certification only valid for loading table above.
- Loading figures are only valid for static loads.
- Loading figures are only valid for single spans with supports at both ends.
- All static systems, other than single spans, need an individual structural calculation. Please contact a structural engineer or Prolyte Group for assistance.
- Loading figures are calculated according to and in full compliance with European standards (Eurocode).
- The self-weight of the trusses is already taken into account.
- Loading figures are only valid for the cross sectional orientation of the truss as shown by the icon in the loading table.
- The interaction between bending moment and shear force at the connection point is already taken into account.
- Truss spans can be assembled from different truss lengths.
- Read the manual before assembling, using and loading the truss.

S52SV - Allowable Loading

						MAXIMUM ALLOWABLE POINT LOADS										
		Uniformly Distributed Load				Centre Point Load				Single Load Third Points Load per Point		Single Load Fourth Points Load per Point		Single Load Fifth Points Load per Point		
SPAN		UDL		DEFLECTION		CPL		DEFLECTION		TPL		QPL		FPL		SPAN
m	ft	kg/m	lbs/ft	mm	inch	kgs	lbs	mm	inch	kgs	lbs	kgs	lbs	kgs	lbs	total weight
3	9,8	1880,2	1265,1	5	0,2	2946,1	6501,9	4	0,2	1863,5	4112,8	1410,7	3113,4	1144,2	2525,2	45,0
4	13,1	1406,8	946,6	9	0,4	2505,6	5529,8	7	0,3	1584,5	3496,9	1239,4	2735,3	1028,6	2270,1	60,0
5	16,4	1122,7	755,5	15	0,6	2179,5	4810,2	12	0,5	1384,5	3055,5	1109,0	2447,6	927,3	2046,5	75,0
6	19,7	933,4	628,0	21	0,8	1925,9	4250,5	17	0,7	1245,2	2748,1	1013,9	2237,7	846,0	1867,2	90,0
7	23,0	686,7	462,1	29	1,1	1722,6	3801,8	23	0,9	1129,9	2493,8	932,5	2058,1	752,1	1660,0	105,0
8	26,2	522,6	351,7	37	1,5	1555,6	3433,2	30	1,2	1032,8	2279,4	862,0	1902,4	675,9	1491,6	120,0
9	29,5	410,1	275,9	47	1,9	1415,7	3124,5	38	1,5	949,7	2096,1	800,1	1765,8	612,6	1351,9	135,0
10	32,8	329,6	221,8	59	2,3	1296,6	2861,6	47	1,8	877,7	1937,1	725,7	1601,6	559,1	1233,9	150,0
11	36,1	270,1	181,7	71	2,8	1193,7	2634,6	57	2,2	814,5	1797,6	661,8	1460,7	513,2	1132,6	165,0
12	39,4	224,8	151,2	84	3,3	1103,8	2436,1	67	2,7	758,6	1674,1	607,0	1339,7	473,3	1044,6	180,0
13	42,6	189,5	127,5	99	3,9	1024,4	2260,8	79	3,1	708,6	1563,8	559,3	1234,4	438,3	967,3	195,0
14	45,9	161,6	108,7	115	4,5	953,6	2104,5	92	3,6	663,6	1464,5	517,3	1141,8	407,2	898,7	210,0
15	49,2	139,0	93,5	132	5,2	889,9	1964,0	105	4,1	622,7	1374,4	480,1	1059,5	379,4	837,3	225,0
16	52,5	120,5	81,1	150	5,9	832,3	1836,8	120	4,7	585,5	1292,1	446,7	985,9	354,3	781,9	240,0
17	55,8	105,2	70,8	169	6,7	779,7	1720,8	135	5,3	551,3	1216,7	416,6	919,4	331,5	731,6	255,0
18	59,0	92,4	62,2	190	7,5	731,5	1614,5	152	6,0	519,7	1147,0	389,2	858,9	310,7	685,6	270,0
19	62,3	81,5	54,9	211	8,3	687,1	1516,5	169	6,7	490,4	1082,4	364,1	803,7	291,5	643,4	285,0
20	65,6	72,3	48,6	234	9,2	646,0	1425,7	187	7,4	463,2	1022,2	341,1	752,9	273,8	604,4	300,0

1 inch = 25,4 mm | 1m = 3.28 ft | 1 lbs = 0,453 kg

- Tüv certification only valid for loading table above.
- Loading figures are only valid for static loads.
- Loading figures are only valid for single spans with supports at both ends.
- All static systems, other than single spans, need an individual structural calculation. Please contact a structural engineer or Prolyte Group for assistance.
- Loading figures are calculated according to and in full compliance with European standards (Eurocode).
- The self-weight of the trusses is already taken into account.
- Loading figures are only valid for the cross sectional orientation of the truss as shown by the icon in the loading table.
- The interaction between bending moment and shear force at the connection point is already taken into account.
- Truss spans can be assembled from different truss lengths.
- Read the manual before assembling, using and loading the truss.

Photo: Italstage, Italy.

S66 Series truss is constructed of main tubes (50 x 4 mm) and diagonals (30 x 3 mm), and uses the CCS7 coupling system. Both the S66R and S66V have two-sided webbing and are capable of absorbing vertical loads only.

ProlyteStructures supplies a variety of S66 Series truss elements that provide maximum flexibility, including standard or custom-made lengths, circles and arches and several types of corners. ProlyteStructures can create custom-made pieces on request.

S66R

Top View

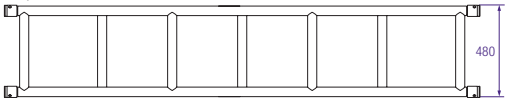

Side View

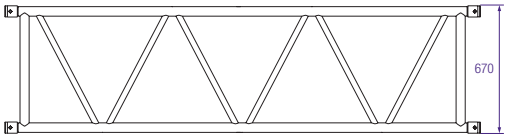

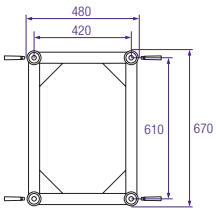

S66V

Top View

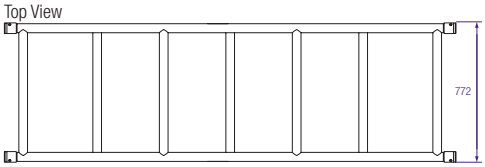

Side View

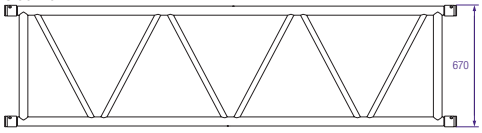

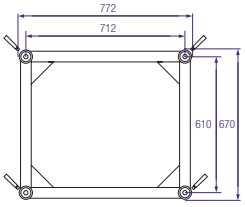

S66R and S66V - Allowable Loading

						MAXIMUM ALLOWABLE POINT LOADS										
		Uniformly Distributed Load				Centre Point Load				Single Load Third Points Load per Point		Single Load Fourth Points Load per Point		Single Load Fifth Points Load per Point		
SPAN		UDL		DEFLECTION		CPL		DEFLECTION		TPL		QPL		FPL		SPAN
m	ft	kg/m	lbs/ft	mm	inch	kgs	lbs	mm	inch	kgs	lbs	kgs	lbs	kgs	lbs	total weight
6	19,7	1012,0	681,0	16	0,6	2286,7	5046,7	13	0,5	1441,1	3180,5	1145,5	2528,1	952,8	2102,9	102,0
7	23,0	865,3	582,2	22	0,9	2065,1	4557,7	18	0,7	1321,4	2916,4	1064,9	2350,3	893,9	1972,9	119,0
8	26,2	680,5	457,9	29	1,1	1880,3	4149,7	23	0,9	1218,8	2689,8	993,7	2193,2	824,3	1819,2	136,0
9	29,5	534,5	359,6	37	1,4	1723,4	3803,6	29	1,2	1129,6	2493,0	930,3	2053,2	752,0	1659,6	153,0
10	32,8	430,0	289,3	45	1,8	1588,4	3505,6	36	1,4	1051,3	2320,2	873,3	1927,4	690,2	1523,3	170,0
11	36,1	352,7	237,3	55	2,2	1470,8	3245,9	44	1,7	981,9	2167,0	821,7	1813,6	636,9	1405,5	187,0
12	39,4	294,0	197,8	65	2,6	1367,1	3017,3	52	2,0	919,8	2030,1	770,2	1699,7	590,2	1302,5	204,0
13	42,6	248,2	167,0	76	3,0	1275,0	2813,9	61	2,4	863,9	1906,7	712,2	1571,8	548,9	1211,4	221,0
14	45,9	211,9	142,6	89	3,5	1192,4	2631,7	71	2,8	813,2	1794,8	661,0	1458,9	512,1	1130,3	238,0
15	49,2	182,6	122,9	102	4,0	1117,8	2467,1	81	3,2	767,0	1692,7	615,5	1358,4	479,1	1057,3	255,0
16	52,5	158,7	106,8	116	4,6	1050,0	2317,4	93	3,6	724,5	1599,0	574,6	1268,2	449,2	991,3	272,0
17	55,8	138,8	93,4	131	5,1	988,0	2180,6	104	4,1	685,4	1512,6	537,7	1186,7	421,9	931,1	289,0
18	59,0	122,1	82,2	146	5,8	931,0	2054,7	117	4,6	649,1	1432,5	504,1	1112,5	396,9	876,0	306,0
19	62,3	108,1	72,7	163	6,4	878,3	1938,3	131	5,1	615,3	1357,9	473,3	1044,6	374,0	825,3	323,0
20	65,6	96,0	64,6	181	7,1	829,3	1830,3	145	5,7	583,7	1288,2	445,0	982,1	352,7	778,4	340,0
21	68,9	85,7	57,7	199	7,8	783,7	1729,6	159	6,3	554,1	1222,9	418,8	924,4	332,9	734,7	357,0
22	72,2	76,7	51,6	219	8,6	741,0	1635,3	175	6,9	526,2	1161,3	394,5	870,7	314,5	694,0	374,0
23	75,4	68,9	46,3	239	9,4	700,8	1546,7	191	7,5	499,9	1103,2	371,9	820,7	297,2	655,8	391,0
24	78,7	62,0	41,7	260	10,2	663,0	1463,3	208	8,2	474,9	1048,1	350,6	773,8	280,9	620,0	408,0

1 inch = 25,4 mm | 1m = 3.28 ft | 1 lbs = 0,453 kg

- Tüv certification only valid for loading table above.
- Loading figures are only valid for static loads.
- Loading figures are only valid for single spans with supports at both ends.
- All static systems, other than single spans, need an individual structural calculation. Please contact a structural engineer or Prolyte Group for assistance.
- Loading figures are calculated according to and in full compliance with European standards (Eurocode).
- The self-weight of the trusses is already taken into account.
- Loading figures are only valid for the cross sectional orientation of the truss as shown by the icon in the loading table.
- The interaction between bending moment and shear force at the connection point is already taken into account.
- Truss spans can be assembled from different truss lengths.
- Read the manual before assembling, using and loading the truss.

Technical Specifications - S66 Series

Types	Rectangular (R), Square (V)
Alloy	EN AW 6082 T6
Main Tubes (Chords)	50 x 4 mm
Braces	30 x 3 mm
Coupling System	CCS7

Structural data can be found at www.prolyte.com

S66 Series - Standard available Lengths and Codes

Metres	Feet	Code*	
0.50/1.00 m in 5 mm steps	0.82'/3.28', in 0.2' steps		
1,00	3.28	S66•-L100	
1,50	4.92	S66•-L150	
1,74*	5.71	S66•-L174	S66•PR-L174
2,00	6.56	S66•-L200	
2,50*	8.20	S66•-L250	S66•PR-L250
3,00	9.84	S66•-L300	
3,26*	10.69	S66•-L326	S66•PR-L326
3,50	11.48	S66•-L350	
4,00	13.12	S66•-L400	

*on • indicate R for Rectangular, V for Square truss.

Example: S66V-L200

Photo: AED RENT, Belgium. Project: Fashion show.

S100F truss is constructed of main tubes (50 x 4 mm) and diagonals (48 x 3 mm), and uses the CCS7 coupling system. ProlyteStructures supplies a variety of S100F truss elements that provide maximum flexibility, including standard or custom-made lengths and several types of corners. ProlyteStructures can create custom-made pieces on request. For obvious reasons, the S100F is not available in curved sections. Increased truss height and larger diagonals make it possible to assemble spans of up to 30 metres. This truss is suited for vertical loading only. The geometry of the bracing makes it possible to combine the S100F truss with the S52F or S36R truss. Extra horizontal braces are welded between the diagonals to make it possible for technicians to climb the truss. The S100F Series folding truss can save up to 70/80% of warehouse and truck space, while the smart placing of the hinges prevents personal injuries. Thanks to the clever spigot pin orientation in the couplers, assembly of the truss is easy.

S100F

Top View

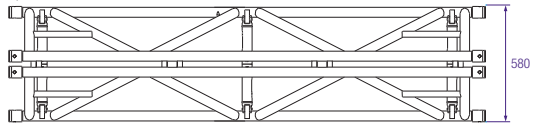

Side View

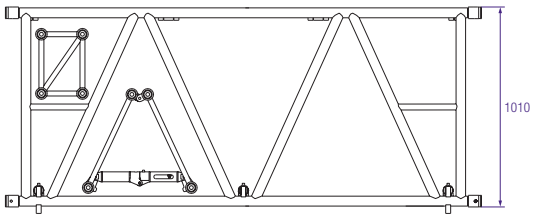

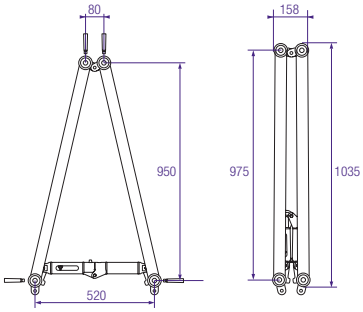

S100F - Allowable Loading

						MAXIMUM ALLOWABLE POINT LOADS										
		Uniformly Distributed Load				Centre Point Load				Single Load Third Points Load per Point		Single Load Fourth Points Load per Point		Single Load Fifth Points Load per Point		
SPAN		UDL		DEFLECTION		CPL		DEFLECTION		TPL		QPL		FPL		SPAN
m	ft	kg/m	lbs/ft	mm	inch	kgs	lbs	mm	inch	kgs	lbs	kgs	lbs	kgs	lbs	total weight
2,4	7,9	828,9	557,7	2	0,1	2023,7	4466,3	1	0,1	1011,8	2233,1	674,6	1488,8	505,9	1116,6	42,7
4,8	15,7	427,3	287,5	7	0,3	1932,9	4265,9	5	0,2	1002,9	2213,4	668,6	1475,6	499,7	1102,7	85,4
7,2	23,6	285,5	192,1	15	0,6	1608,2	3549,3	12	0,5	993,9	2193,6	662,6	1462,4	493,4	1088,9	128,2
9,6	31,5	209,1	140,7	27	1,1	1438,5	3174,8	21	0,8	985,0	2173,8	656,6	1449,2	487,1	1075,1	170,9
12,0	39,4	169,4	114,0	42	1,6	1301,3	2872,0	33	1,3	976,0	2154,0	650,7	1436,0	480,9	1061,3	213,6
14,4	47,2	139,7	94,0	60	2,4	1237,4	2730,9	48	1,9	928,1	2048,2	618,7	1365,5	474,6	1047,5	256,6
16,8	55,1	115,0	77,4	82	3,2	1124,0	2480,8	66	2,6	843,0	1860,6	562,0	1240,4	468,4	1033,6	299,0
19,2	63,0	96,8	65,1	107	4,2	1031,6	2276,8	86	3,4	773,7	1707,6	515,8	1138,4	429,8	948,7	341,8
21,6	70,8	79,5	53,5	136	5,3	929,8	2052,1	109	4,3	697,3	1539,0	464,9	1026,0	387,4	855,0	384,5
24,0	78,7	67,7	45,6	167	6,6	812,8	1793,9	134	5,3	609,6	1345,4	406,4	896,9	338,7	747,4	427,2
26,4	86,6	58,3	39,2	203	8,0	790,7	1745,0	162	6,4	593,0	1308,8	395,3	872,5	329,4	727,1	469,9
28,8	94,5	52,2	35,1	241	9,5	728,1	1606,9	193	7,6	546,1	1205,2	364,0	803,4	303,4	669,5	512,6
31,2	102,3	44,0	29,6	283	11,1	644,0	1421,4	226	8,9	483,0	1066,1	322,0	710,7	268,4	592,3	555,4
33,6	110,2	38,0	25,6	328	12,9	569,9	1257,8	263	10,3	427,4	943,4	285,0	628,9	237,5	524,1	598,2
36,0	118,1	32,7	22,0	360	14,2	547,4	1208,1	301	11,9	410,5	906,1	273,7	604,1	228,1	503,4	641,0

1 inch = 25,4 mm | 1m = 3.28 ft | 1 lbs = 0,453 kg

- Tüv certification only valid for loading table above.
- Loading figures are only valid for static loads.
- Loading figures are only valid for single spans with supports at both ends.
- All static systems, other than single spans, need an individual structural calculation. Please contact a structural engineer or Prolyte Group for assistance.
- Loading figures are calculated according to and in full compliance with European standards (Eurocode).
- The self-weight of the trusses is already taken into account.
- Loading figures are only valid for the cross sectional orientation of the truss as shown by the icon in the loading table.
- The interaction between bending moment and shear force at the connection point is already taken into account.
- Truss spans can be assembled from different truss lengths.
- Read the manual before assembling, using and loading the truss.

Technical Specifications - S100F	
Types	Folding (F)
Alloy	EN AW 6082 T6
Main Tubes (Chords)	50 x 4 mm
Braces	48 x 3 mm
Coupling System	CCS7

Structural data can be found at www.prolyte.com

S100F - Standard available Lengths and Codes		
Metres	**Feet**	**Code**
0,74	3.28	S100F-L074
0,80	2.62	S100F-L080
1,20	3.94	S100F-L120
1,60	5.25	S100F-L160
2,40	7,87	S100F-L240

Other Lenghts on request

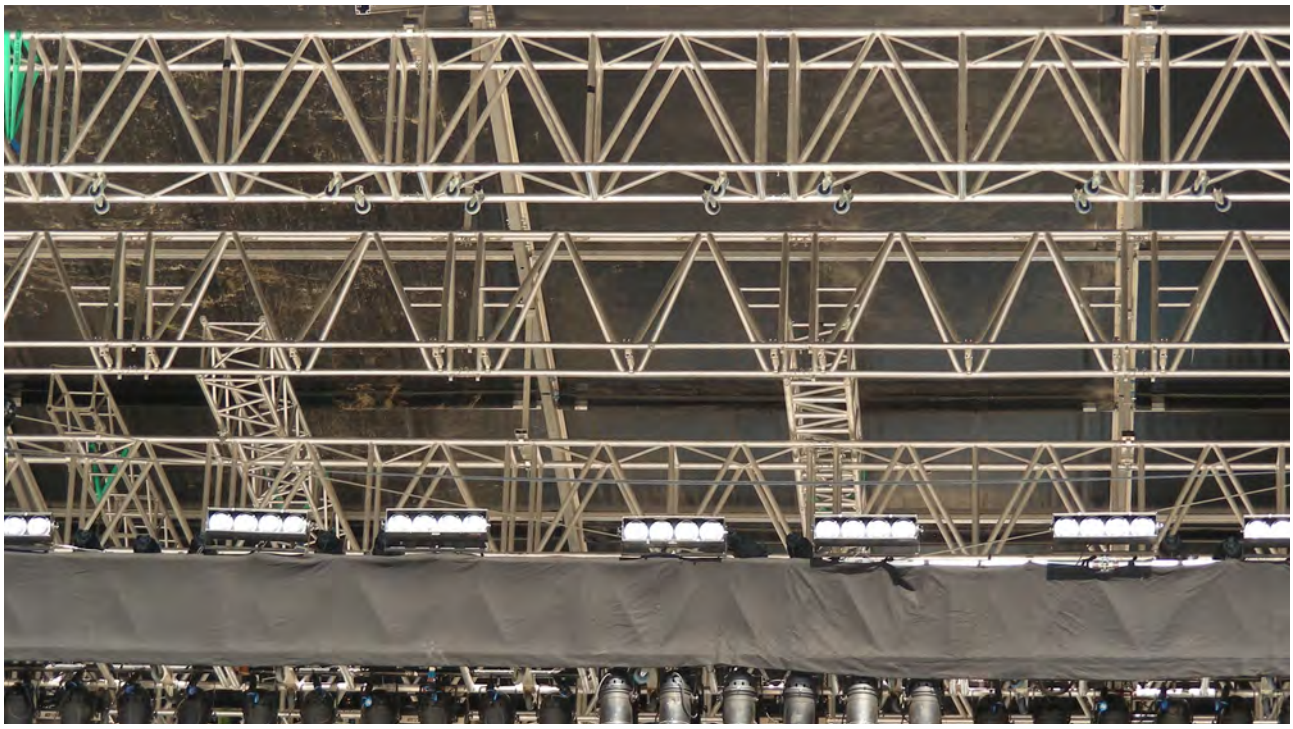

Photo: ModifiC, Russian Federation. Project: Armenian festival.

B100RV truss is constructed of main tubes (60 x 6 mm) and diagonals (48 x 3 mm), and uses the CCS7 coupling system. ProlyteStructures supplies a variety of B100RV truss elements that provide maximum flexibility, including standard or custom-made lengths, circles and arches and some corners. ProlyteStructures can create custom-made pieces on request.

Due to the 4-sided webbing of the B100RV truss, it can absorb vertical as well as horizontal loads, which makes it ideal for outdoor use or 3-dimensional structures. The B100RV truss is equipped with a set of castors as standard. These castors are positioned on the inside of the main chords to allow for easy stacking of the truss for transportation purposes. Thanks to the clever spigot pin orientation in the couplers, assembly of the truss is foolproof.

B100RV

Top View

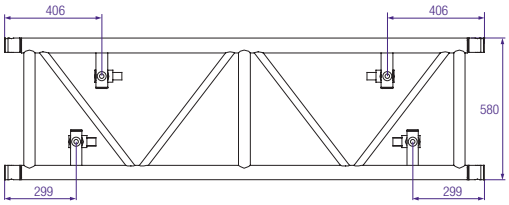

Side View

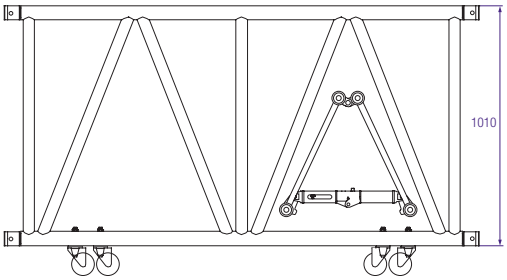

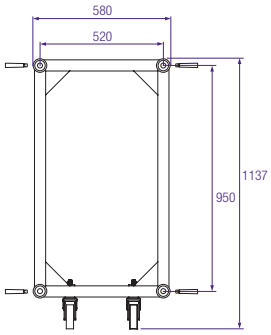

Photo: Kühl Beschallung, Dubai

Technical Specifications - B100RV Series	
Types	Rectangular (R)
Alloy	EN AW 6082 T6
Main Tubes (Chords)	60 x 6 mm
Braces	48 x 3 mm
Coupling System	CCS7
Structural data can be found at www.prolyte.com	

B100RV Series - Standard available Lengths and Codes		
Metres	**Feet**	**Code**
0,74	2.43	B100RV-L074
0,80	2.62	B100RV-L080
1,00	3.28	B100RV-L100
1,20	3.94	B100RV-L120
1,60	5.25	B100RV-L160
2,00	6.56	B100RV-L200
2,40	7.87	B100RV-L240
2,50	8.20	B100RV-L250
3,00	9.84	B100RV-L300
3,20	10.50	B100RV-L320
3,50	11.48	B100RV-L350
4,00	13.12	B100RV-L400
4,80	15.74	B100RV-L480
Other Lenghts on request		

B100RV - Allowable Loading

						MAXIMUM ALLOWABLE POINT LOADS										
		Uniformly Distributed Load				Centre Point Load				Single Load Third Points Load per Point		Single Load Fourth Points Load per Point		Single Load Fifth Points Load per Point		
SPAN		UDL		DEFLECTION		CPL		DEFLECTION		TPL		QPL		FPL		SPAN
m	ft	kg/m	lbs/ft	mm	inch	kgs	lbs	mm	inch	kgs	lbs	kgs	lbs	kgs	lbs	total weight
6	19,7	1974,8	1328,8	9	0,3	5715,2	12613,4	7	0,3	3507,0	7739,9	2695,8	5949,7	2209,9	4877,2	132,0
7	23,0	1689,4	1136,8	12	0,5	5236,7	11557,5	10	0,4	3234,8	7139,3	2525,4	5573,5	2078,3	4586,7	154,0
8	26,2	1475,4	992,8	16	0,6	4828,7	10657,0	13	0,5	3023,2	6672,2	2388,2	5270,7	1977,4	4364,2	176,0
9	29,5	1245,1	837,8	20	0,8	4476,3	9879,2	16	0,6	2835,7	6258,4	2263,5	4995,6	1888,0	4166,9	198,0
10	32,8	1004,3	675,7	24	1,0	4168,4	9199,7	20	0,8	2668,3	5888,8	2149,6	4744,3	1805,2	3984,0	220,0
11	36,1	826,1	555,8	30	1,2	3896,8	8600,2	24	0,9	2517,7	5556,5	2045,1	4513,4	1709,3	3772,4	242,0
12	39,4	690,5	464,6	35	1,4	3655,1	8066,8	28	1,1	2381,4	5255,7	1948,6	4300,5	1597,4	3525,5	264,0
13	42,6	585,1	393,7	41	1,6	3438,4	7588,6	33	1,3	2257,3	4981,8	1859,2	4103,2	1497,8	3305,7	286,0
14	45,9	501,4	337,3	48	1,9	3242,8	7157,0	38	1,5	2143,7	4731,2	1754,8	3872,7	1408,5	3108,5	308,0
15	49,2	433,8	291,9	55	2,2	3065,2	6764,9	44	1,7	2039,3	4500,7	1626,9	3590,5	1327,8	2930,5	330,0
16	52,5	378,6	254,7	63	2,5	2902,9	6406,8	50	2,0	1942,9	4287,9	1514,3	3342,1	1254,5	2768,6	352,0
17	55,8	332,8	223,9	71	2,8	2754,0	6078,0	56	2,2	1853,4	4090,5	1414,3	3121,4	1178,6	2601,2	374,0
18	59,0	294,4	198,1	79	3,1	2616,6	5774,8	63	2,5	1770,2	3906,7	1324,8	2923,8	1104,0	2436,5	396,0
19	62,3	261,9	176,2	88	3,5	2488,3	5491,6	71	2,8	1692,4	3735,1	1244,1	2745,8	1036,8	2288,2	418,0
20	65,6	234,2	157,6	98	3,8	2341,9	5168,6	78	3,1	1619,5	3574,2	1171,0	2584,3	975,8	2153,6	440,0
21	68,9	210,3	141,5	108	4,2	2208,4	4874,0	86	3,4	1551,0	3423,0	1104,2	2437,0	920,2	2030,8	462,0
22	72,2	189,6	127,6	118	4,7	2086,0	4603,9	95	3,7	1486,4	3280,4	1043,0	2302,0	869,2	1918,3	484,0
23	75,4	171,6	115,5	129	5,1	1973,3	4355,2	103	4,1	1425,3	3145,7	986,7	2177,6	822,2	1814,6	506,0
24	78,7	155,8	104,8	141	5,5	1869,1	4125,1	113	4,4	1367,4	3017,9	934,5	2062,5	778,8	1718,8	528,0
25	82,0	141,8	95,4	153	6,0	1772,3	3911,4	122	4,8	1312,5	2896,6	886,1	1955,7	738,4	1629,7	550,0
26	85,3	129,4	87,1	165	6,5	1682,0	3712,3	132	5,2	1260,1	2781,1	841,0	1856,1	700,8	1546,8	572,0
27	88,6	118,3	79,6	178	7,0	1597,7	3526,0	142	5,6	1198,2	2644,5	798,8	1763,0	665,7	1469,2	594,0
28	91,8	108,5	73,0	191	7,5	1518,5	3351,3	153	6,0	1138,9	2513,5	759,3	1675,7	632,7	1396,4	616,0
29	95,1	99,6	67,0	205	8,1	1444,0	3187,0	164	6,5	1083,0	2390,2	722,0	1593,5	601,7	1327,9	638,0
30	98,4	91,6	61,6	220	8,7	1373,8	3031,9	176	6,9	1030,3	2273,9	686,9	1516,0	572,4	1263,3	660,0
31	101,7	84,3	56,8	235	9,2	1307,3	2885,2	188	7,4	980,5	2163,9	653,7	1442,6	544,7	1202,2	682,0
32	105,0	77,8	52,3	250	9,8	1244,3	2746,2	200	7,9	933,2	2059,6	622,2	1373,1	518,5	1144,2	704,0
33	108,2	71,8	48,3	266	10,5	1184,4	2614,1	213	8,4	888,3	1960,6	592,2	1307,0	493,5	1089,2	726,0
34	111,5	66,3	44,6	282	11,1	1127,4	2488,3	226	8,9	845,6	1866,2	563,7	1244,1	469,8	1036,8	748,0
35	114,8	61,3	41,3	299	11,8	1073,1	2368,2	239	9,4	804,8	1776,2	536,5	1184,1	447,1	986,8	770,0
36	118,1	56,7	38,2	316	12,5	1021,1	2253,5	253	10,0	765,8	1690,1	510,5	1126,7	425,4	938,9	792,0
37	121,4	52,5	35,3	334	13,2	971,3	2143,6	268	10,5	728,4	1607,7	485,6	1071,8	404,7	893,2	814,0
38	124,6	48,6	32,7	353	13,9	923,5	2038,2	282	11,1	692,6	1528,6	461,8	1019,1	384,8	849,2	836,0
39	127,9	45,0	30,3	371	14,6	877,6	1936,9	297	11,7	658,2	1452,7	438,8	968,4	365,7	807,0	858,0
40	131,2	41,7	28,0	391	15,4	833,5	1839,4	313	12,3	625,1	1379,6	416,7	919,7	347,3	766,4	880,0

1 inch = 25,4 mm | 1m = 3.28 ft | 1 lbs = 0,453 kg

- Tüv certification only valid for loading table above.
- Loading figures are only valid for static loads.
- Loading figures are only valid for single spans with supports at both ends.
- All static systems, other than single spans, need an individual structural calculation. Please contact a structural engineer or Prolyte Group for assistance.
- Loading figures are calculated according to and in full compliance with European standards (Eurocode).
- The self-weight of the trusses is already taken into account.
- Loading figures are only valid for the cross sectional orientation of the truss as shown by the icon in the loading table.
- The interaction between bending moment and shear force at the connection point is already taken into account.
- Truss spans can be assembled from different truss lengths.
- Read the manual before assembling, using and loading the truss.

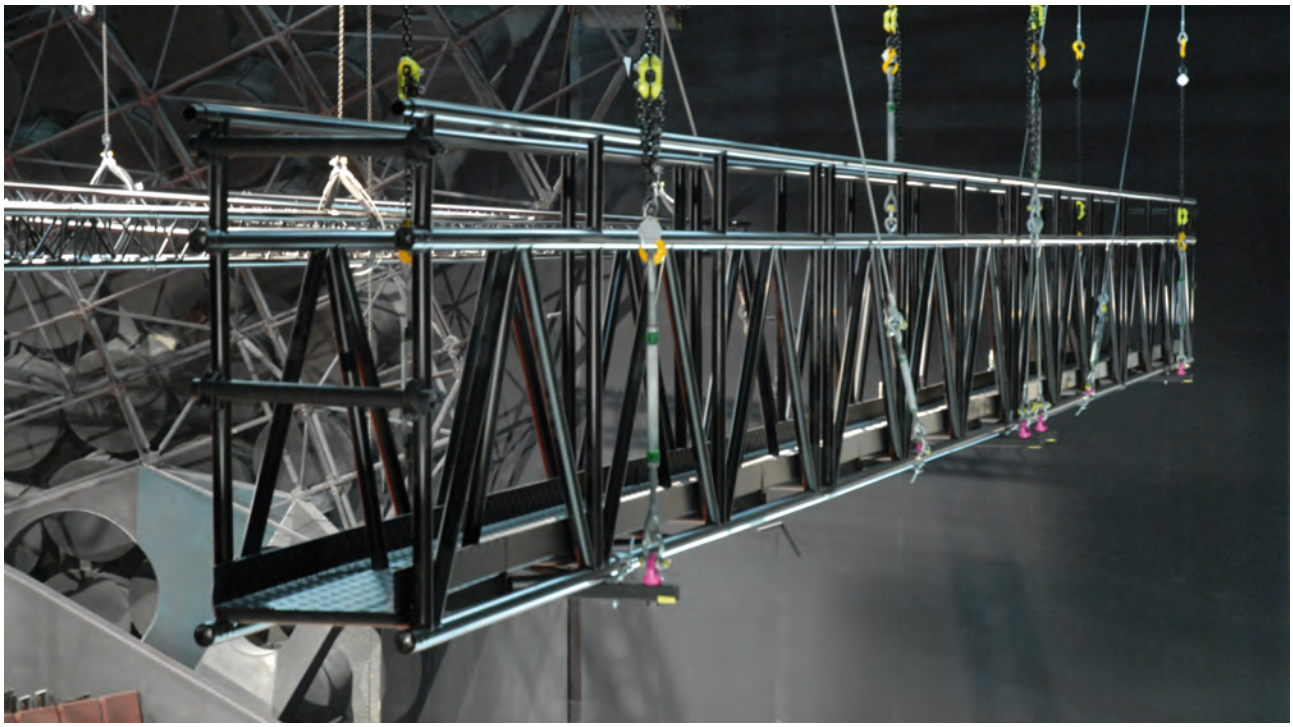

Photo: Jan Hoefnagel, Flashlight Rental BV, The Netherlands. Project: Blue Man Group.

The design of the ProlyteStructures Catwalk Truss (B100RV-CW) is based on the B100RV. It can be used to create mother grids or working platforms, and in a theatrical environment it can be used for prosceniums or lighting bridges. The B100RV-CW truss is fitted with an extra handrail on the top side and a reinforced plate on the bottom side to create a walking platform. The Catwalk Truss can be flown by assembling bracing bars with fixed lifting eyes to the bottom braces of the truss.

The Catwalk truss is standard non-powder coated.

B100CW

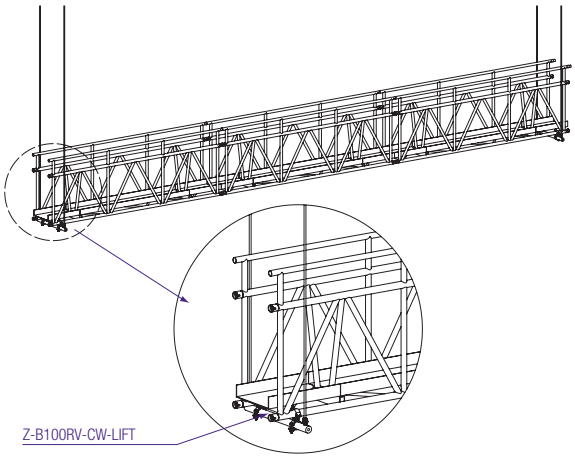

B100CW-C003

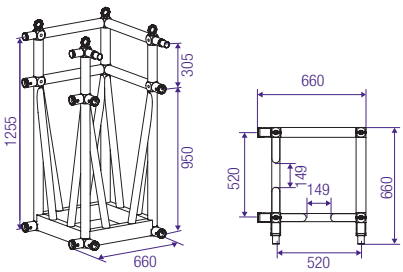

B100CW-C016

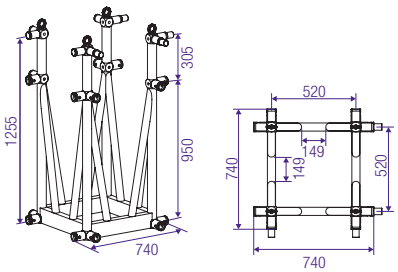

B100CW-C017

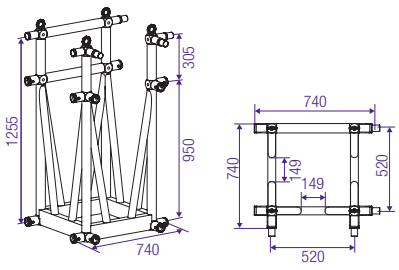

B100RV - CW - Allowable Loading

						MAXIMUM ALLOWABLE POINT LOADS										
		Uniformly Distributed Load				Centre Point Load				Single Load Third Points Load per Point		Single Load Fourth Points Load per Point		Single Load Fifth Points Load per Point		
SPAN		UDL		DEFLECTION		CPL		DEFLECTION		TPL		QPL		FPL		SPAN
m	ft	kg/m	lbs/ft	mm	inch	kgs	lbs	mm	inch	kgs	lbs	kgs	lbs	kgs	lbs	total weight
4	13,1	1475,0	992,5	1	0,04	3188,7	7037,4	1	0,04	2391,5	5278,0	1594,3	3518,7	1328,6	2932,2	120,0
5	16,4	1010,7	680,0	2	0,08	2526,6	5576,3	1	0,04	1895,0	4182,2	1263,3	2788,1	1052,8	2323,4	150,0
6	19,7	693,6	466,7	2	0,08	2080,8	4592,3	2	0,08	1560,6	3444,2	1040,4	2296,1	867,0	1913,4	180,0
7	23,0	502,4	338,1	3	0,12	1758,5	3880,9	2	0,08	1318,8	2910,7	879,2	1940,5	732,7	1617,0	210,0
8	26,2	378,3	254,6	4	0,16	1513,3	3339,9	3	0,12	1135,0	2504,9	756,7	1670,0	630,6	1391,6	240,0
9	29,5	293,3	197,3	5	0,20	1319,7	2912,5	4	0,16	989,8	2184,4	659,8	1456,3	549,9	1213,6	270,0
10	32,8	232,4	156,4	6	0,24	1162,1	2564,7	5	0,20	871,6	1923,5	581,0	1282,3	484,2	1068,6	300,0
11	36,1	187,4	126,1	7	0,28	1030,7	2274,6	6	0,24	773,0	1706,0	515,3	1137,3	429,4	947,8	330,0
12	39,4	153,1	103,0	9	0,35	918,9	2028,0	7	0,28	689,2	1521,0	459,4	1014,0	382,9	845,0	360,0
13	42,6	126,5	85,1	10	0,39	822,2	1814,7	8	0,31	616,7	1361,0	411,1	907,3	342,6	756,1	390,0
14	45,9	105,4	70,9	12	0,47	737,5	1627,6	10	0,39	553,1	1220,7	368,7	813,8	307,3	678,2	420,0
15	49,2	88,3	59,4	14	0,55	662,2	1461,5	11	0,43	496,7	1096,1	331,1	730,7	275,9	609,0	450,0
16	52,5	74,3	50,0	16	0,63	594,7	1312,4	13	0,51	446,0	984,3	297,3	656,2	247,8	546,8	480,0
17	55,8	62,8	42,2	18	0,71	533,5	1177,4	14	0,55	400,1	883,0	266,7	588,7	222,3	490,6	510,0
18	59,0	53,1	35,7	20	0,79	477,6	1054,0	16	0,63	358,2	790,5	238,8	527,0	199,0	439,2	540,0
19	62,3	44,9	30,2	22	0,87	426,2	940,5	18	0,71	319,6	705,4	213,1	470,3	177,6	391,9	570,0
20	65,6	37,9	25,5	25	0,98	378,5	835,4	20	0,79	283,9	626,6	189,3	417,7	157,7	348,1	600,0

1 inch = 25,4 mm | 1m = 3.28 ft | 1 lbs = 0,453 kg

- Tüv certification only valid for loading table above.
- Loading figures are only valid for static loads.
- Loading figures are only valid for single spans with supports at both ends.
- All static systems, other than single spans, need an individual structural calculation. Please contact a structural engineer or Prolyte Group for assistance.
- Loading figures are calculated according to and in full compliance with European standards (Eurocode).
- The self-weight of the trusses is already taken into account.
- Loading figures are only valid for the cross sectional orientation of the truss as shown by the icon in the loading table.
- The interaction between bending moment and shear force at the connection point is already taken into account.
- Truss spans can be assembled from different truss lengths.
- Read the manual before assembling, using and loading the truss.

Photo: Prosound, South Africa. Turfontein Racecourse.

The D75T truss is a continuation of the development of the very heavy-duty truss range. The D75T truss, with outside measurements of 75 x 75 mm and main chords of 80 mm is designed as a truss for special applications where extreme loads or circumstances require extreme strength. The D75T truss can be used for ultra heavy tower systems or in combination with the mammoth truss or Space Roof. The design is such that it can be used in configurations as a tower or as a span. Besides that, it has four-sided webbing with integrated ladder steps. The smart placing of the pin-fork connection makes it non-orientated and facilitates assembly.

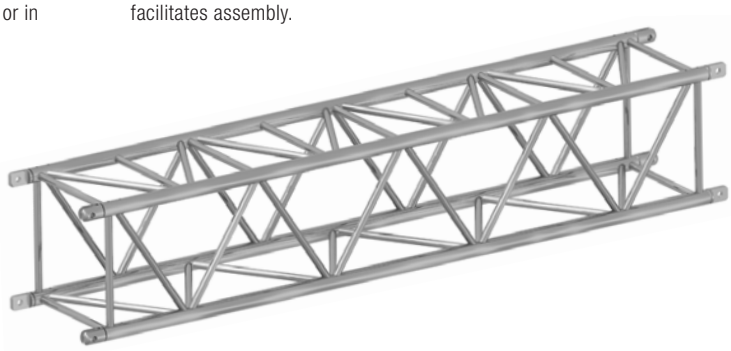

D75T

Side View

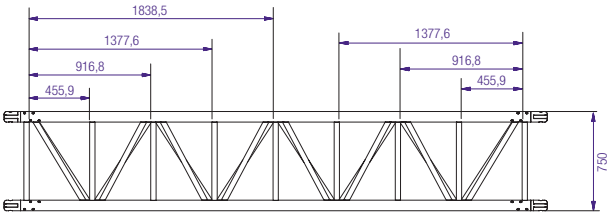

Top View

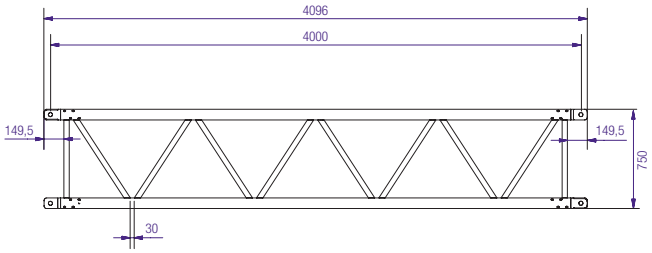

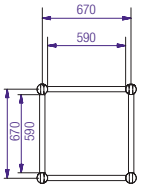

D75T - Allowable Loading

SPAN		Uniformly Distributed Load UDL		DEFLECTION		MAXIMUM ALLOWABLE POINT LOADS: Centre Point Load CPL		DEFLECTION		Single Load Third Points Load per Point TPL		Single Load Fourth Points Load per Point QPL		Single Load Fifth Points Load per Point FPL		SPAN
m	ft	kg/m	lbs/ft	mm	inch	kgs	lbs	mm	inch	kgs	lbs	kgs	lbs	kgs	lbs	total weight
16	52,5	541,1	364,1	95	3,7	4960,3	10947	75,9	3,0	3720,3	8210,6	2480,2	5473,7	2066,8	4561,4	640.0
17	55,8	507,2	341,3	107	4,2	4633,6	10226	85,6	3,4	3475,2	7669,8	2316,8	5113,2	1930,7	4261,0	680.0
18	59,0	477,0	321,0	120	4,7	4341,2	9581	96,0	3,8	3255,9	7185,7	2170,6	4790,5	1808,8	3992,1	720.0
19	62,3	429,2	288,8	134	5,3	4077,6	8999	107,0	4,2	3058,2	6749,5	2038,8	4499,7	1699,0	3749,7	760.0
20	65,6	383,9	258,3	148	5,8	3838,7	8472	118,5	4,7	2879,0	6354,0	1919,3	4236,0	1599,4	3530,0	800.0
21	68,9	344,8	232,0	163	6,4	3620,7	7991	130,7	5,1	2715,5	5993,2	1810,4	3995,5	1508,6	3329,6	840.0
22	72,2	311,0	209,3	179	7,1	3421,0	7550	143,4	5,6	2565,7	5662,6	1710,5	3775,0	1425,4	3145,9	880.0
23	75,4	281,5	189,4	196	7,7	3237,0	7144	156,8	6,2	2427,8	5358,1	1618,5	3572,0	1348,8	2976,7	920.0
24	78,7	255,6	172,0	213	8,4	3066,9	6769	170,7	6,7	2300,2	5076,5	1533,4	3384,3	1277,9	2820,3	960.0
25	82,0	232,7	156,6	231	9,1	2908,9	6420	185,2	7,3	2181,7	4815,0	1454,5	3210,0	1212,1	2675,0	1000.0
26	85,3	212,4	142,9	250	9,9	2761,7	6095	200,3	7,9	2071,3	4571,4	1380,9	3047,6	1150,7	2539,7	1040.0
27	88,6	194,4	130,8	270	10,6	2624,1	5791	216,0	8,5	1968,1	4343,6	1312,1	2895,7	1093,4	2413,1	1080.0
28	91,8	178,2	119,9	290	11,4	2495,0	5507	232,3	9,1	1871,3	4129,9	1247,5	2753,3	1039,6	2294,4	1120.0
29	95,1	163,7	110,1	311	12,3	2373,6	5239	249,2	9,8	1780,2	3929,0	1186,8	2619,3	989,0	2182,8	1160.0
30	98,4	150,6	101,3	333	13,1	2259,1	4986	266,7	10,5	1694,3	3739,4	1129,6	2492,9	941,3	2077,4	1200.0
31	101,7	138,8	93,4	356	14,0	2150,8	4747	284,8	11,2	1613,1	3560,1	1075,4	2373,4	896,2	1977,9	1240.0
32	105,0	128,0	86,1	379	14,9	2048,2	4520	303,4	11,9	1536,1	3390,2	1024,1	2260,2	853,4	1883,5	1280.0
33	108,2	118,2	79,5	403	15,9	1950,6	4305	322,7	12,7	1463,0	3228,8	975,3	2152,5	812,8	1793,8	1320.0
34	111,5	109,3	73,5	428	16,8	1857,8	4100	342,5	13,5	1393,4	3075,1	928,9	2050,1	774,1	1708,4	1360.0
35	114,8	101,1	68,0	454	17,9	1769,2	3905	363,0	14,3	1326,9	2928,5	884,6	1952,4	737,2	1627,0	1400.0
36	118,1	93,6	63,0	480	18,9	1684,6	3718	384,0	15,1	1263,4	2788,4	842,3	1858,9	701,9	1549,1	1440.0
37	121,4	86,7	58,3	507	20,0	1603,5	3539	405,7	16,0	1202,7	2654,3	801,8	1769,5	668,1	1474,6	1480.0
38	124,6	80,3	54,0	535	21,0	1525,8	3367	427,9	16,8	1144,4	2525,6	762,9	1683,7	635,8	1403,1	1520.0
39	127,9	74,4	50,1	563	22,2	1451,2	3203	450,7	17,7	1088,4	2402,0	725,6	1601,4	604,7	1334,5	1560.0
40	131,2	69,0	46,4	592	23,3	1379,3	3044	474,1	18,7	1034,5	2283,1	689,7	1522,1	574,7	1268,4	1600.0

1 inch = 25,4 mm | 1m = 3.28 ft | 1 lbs = 0,453 kg

- Tüv certification only valid for loading table above.
- Loading figures are only valid for static loads.
- Loading figures are only valid for single spans with supports at both ends.
- All static systems, other than single spans, need an individual structural calculation. Please contact a structural engineer or Prolyte Group for assistance.
- Loading figures are calculated according to and in full compliance with European standards (Eurocode).
- The self-weight of the trusses is already taken into account.
- Loading figures are only valid for the cross sectional orientation of the truss as shown by the icon in the loading table.
- The interaction between bending moment and shear force at the connection point is already taken into account.
- Truss spans can be assembled from different truss lengths.
- Read the manual before assembling, using and loading the truss.

Technical Specifications - D75T

Types	Tower truss
Alloy	EN AW 6082 T6
Main Tubes (Chords)	80 x 10 mm
Braces	40 x 3 mm
Coupling System	Pin / Fork connection

Structural data can be found at www.prolyte.com

D75T - Standard available Lengths and Codes

Metres	Feet	Code
0.50/1.00 m in 5 mm steps	0.82'/3.28', in 0.2' steps	
1,00	3.28	D75T-L100
2,00	6.56	D75T-L200
3,00	9.84	D75T-L300
3,85	12.62	D75T-L385
4,00	13.11	D75T-L400
6,00	19.68	D75T-L600

Other Lenghts on request

Photo: Malecon, Germany

BIG, BIGGER, BIGGEST?

The ProlyteStructures M145RV Mammoth Truss is one of the largest trusses ever constructed from aluminium. The design of this truss not only reflects the ProlyteStructures philosophy of making user-friendly products, it also underscores the unrivalled technological knowledge and experience ProlyteStructures has gained over the years.

EXPERIENCE TRANSLATED INTO DESIGN

Mammoth Truss provides massive strength for a range of application possibilities within a large construction, such as a roof system or mother grid. With its superior loading capacity the M145RV Mammoth Truss is five times stronger than the B100 Series truss. For example, on a stretch of 30 metres you still can apply a point load of 6400 kg. Other truss types can be stored inside the M145RV trusses. The overall measurements are thus designed such that container and truck space are efficiently used.

M145RV

Top View

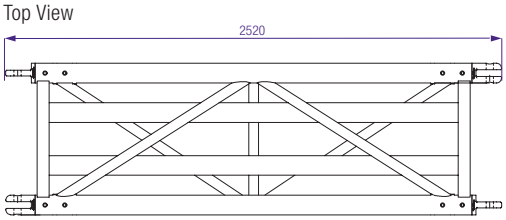

Side View

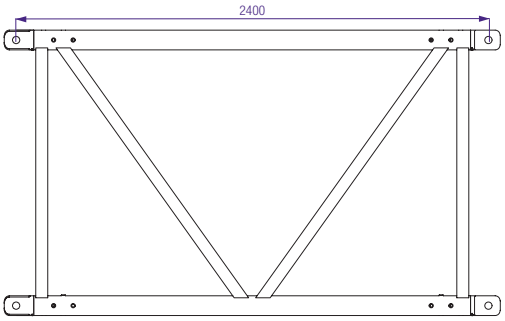

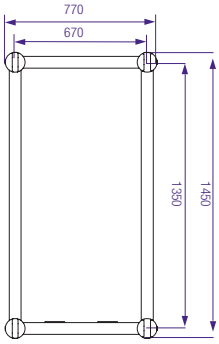

M145RV - Allowable Loading

						MAXIMUM ALLOWABLE POINT LOADS										
		Uniformly Distributed Load				Centre Point Load				Single Load Third Points Load per Point		Single Load Fourth Points Load per Point		Single Load Fifth Points Load per Point		
SPAN		UDL		DEFLECTION		CPL		DEFLECTION		TPL		QPL		FPL		SPAN
m	ft	kg/m	lbs/ft	mm	inch	kgs	lbs	mm	inch	kgs	lbs	kgs	lbs	kgs	lbs	total weight
24.0	78.7	700.0	471.0	122	4.97	8400.0	18538.8	97	3.99	6300.0	13904.1	4200.0	9269.4	3486.0	7693.6	1200
26.4	86.6	569.8	383.4	147	6.01	7521.8	16600.7	118	4.83	5641.4	12450.5	3760.9	8300.3	3121.6	6889.3	1320
28.8	94.5	470.8	316.8	175	7.16	6780.0	14963.5	140	5.75	5085.0	11222.6	3390.0	7481.7	2813.7	6209.8	1440
31.2	102.3	393.8	265.0	206	8.40	6143.1	13557.8	165	6.75	4607.3	10168.3	3071.5	6778.9	2549.4	5626.5	1560
33.6	110.2	332.7	223.8	239	9.74	5588.6	12334.0	191	7.83	4191.4	9250.5	2794.3	6167.0	2319.3	5118.6	1680
36.0	118.1	283.3	190.6	274	11.18	5100.0	11255.7	219	8.99	3825.0	8441.8	2550.0	5627.9	2116.5	4671.1	1800
38.4	126.0	243.0	163.5	312	12.72	4665.0	10295.7	249	10.22	3498.8	7721.7	2332.5	5147.8	1936.0	4272.7	1920
40.8	133.8	209.5	141.0	352	14.36	4274.1	9433.0	282	11.54	3205.6	7074.7	2137.1	4716.5	1773.8	3914.7	2040
43.2	141.7	181.5	122.1	394	16.10	3920.0	8651.4	316	12.94	2940.0	6488.6	1960.0	4325.7	1626.8	3590.3	2160
45.6	149.6	157.8	106.1	440	17.94	3596.8	7938.2	352	14.42	2697.6	5953.7	1798.4	3969.1	1492.7	3294.4	2280
48.0	157.4	137.5	92.5	487	19.88	3300.0	7283.1	390	15.98	2475.0	5462.3	1650.0	3641.6	1369.5	3022.5	2400
50.4	165.3	120.1	80.8	537	21.91	3025.7	6677.8	430	17.61	2269.3	5008.3	1512.9	3338.9	1255.7	2771.3	2520
52.8	173.2	105.0	70.6	589	24.05	2770.9	6115.4	472	19.33	2078.2	4586.5	1385.5	3057.7	1149.9	2537.9	2640
55.2	181.1	91.8	61.8	644	26.29	2533.0	5590.4	516	21.13	1899.8	4192.8	1266.5	2795.2	1051.2	2320.0	2760
57.6	188.9	80.2	54.0	701	28.62	2310.0	5098.2	561	23.00	1732.5	3823.6	1155.0	2549.1	958.7	2115.7	2880
60.0	196.8	70.0	47.1	761	31.06	2100.0	4634.7	609	24.96	1575.0	3476.0	1050.0	2317.4	871.5	1923.4	3000

1 inch = 25,4 mm | 1m = 3.28 ft | 1 lbs = 0,453 kg

- Tüv certification only valid for loading table above.
- Loading figures are only valid for static loads.
- Loading figures are only valid for single spans with supports at both ends.
- All static systems, other than single spans, need an individual structural calculation. Please contact a structural engineer or Prolyte Group for assistance.
- Loading figures are calculated according to and in full compliance with European standards (Eurocode).
- The self-weight of the trusses is already taken into account.
- Loading figures are only valid for the cross sectional orientation of the truss as shown by the icon in the loading table.
- The interaction between bending moment and shear force at the connection point is already taken into account.
- Truss spans can be assembled from different truss lengths.
- Read the manual before assembling, using and loading the truss.

Technical Specifications - M145RV

Types	Rectangular (RV)
Alloy	EN AW 6082 T6
Main Tubes (Chords)	100 x 8 mm
Braces	60 x 60 x 3,5 / 50 x 4 mm
Coupling System	Pin / Fork connection

Structural data can be found at www.prolyte.com

M145RV - Standard available Lengths and Codes

Metres	Feet	Code
2,40	8	M145RV-L240
3,00	9.84	M145RV-L300
4,80	16	M145RV-L480
6,00	19.69	M145RV-L600

Other Lenghts on request

Photo: AED Rent, Belgium.

In addition to straight lengths, ProlyteStructures manufactures circular trusses, curved trusses and arcs. These trusses are manufactured with a high degree of accuracy, ensuring a perfect fit without distortion. Semi-automated welding jigs are used for production to ensure that all parts are identical. This guarantees that every segment of a circle can be mounted at any position or be replaced by a new part without affecting the integrity or overall shape of the circle.

Photo: PRO 1, Project: Wella fasion show.

Circular or curved trusses are manufactured in different diameters or degrees. When ordering a complete circular truss, the number of cuttings required (each segment requires one cut) must be indicated. Couplers do not have to be ordered separately, as they are included in the amount of cuttings ordered. A “cutting” divides the circle into segments. Individual segments cannot be longer than 5 metres. ProlyteStructures recommends segment lengths of between 3/4 metres, and an even number of segments. For further details in this regard, please refer to the Prolyte BlackBook, “Technical Matters”.

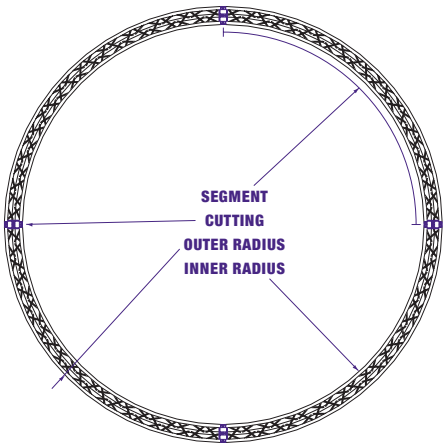

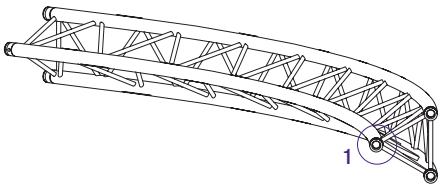

1 - APEX IN

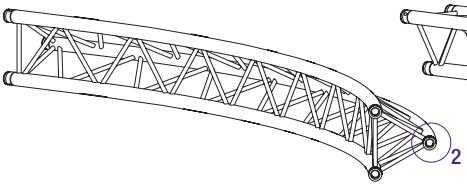

2 - APEX OUT

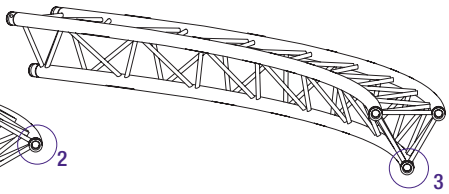

3 - APEX DOWN/UP

X30D Circular truss - Allowable Loading

Diameter		3 Suspension Points				4 Suspension Points				6 Suspension Points				8 Suspension Points				10 Suspension Points			
		UDL		CPL		UDL		CPL		UDL		CPL		UDL		CPL		UDL		CPL	
m	ft	kg/m	lbs/ft	kg	lbs	kg/m	lbs/ft	kg	lbs	kg/m	lbs/ft	kg	lbs	kg/m	lbs/ft	kg	lbs	kg/m	lbs/ft	kg	lbs
4	13.1	115	77,7	318	701,8	205	138,0	457	1008,4	410	275,9	686	1515,4	622	418,3	840	1854,4	830	558,7	939	2072,0
6	19.7	58	39,3	232	512,1	110	74,3	349	769,4	239	161,1	533	1177,2	380	255,6	714	1575,7	521	350,5	848	1872,9
8	26.2	34	22,8	182	402,6	62	41,7	260	573,1	142	95,7	397	876,9	255	171,4	533	1177,2	369	248,2	669	1476,2
10	32.8	21	14,0	146	321,8	39	26,1	203	449,1	90	60,7	315	695,3	162	109,1	425	937,1	255	171,4	533	1177,2
12	39.4	14	9,3	116	255,5	26	17,7	165	364,8	62	41,7	260	573,1	112	75,3	352	776,2	176	118,5	443	977,2
14	45.9	10	6,4	93	206,2	19	12,6	137	303,1	45	30,2	220	484,8	82	54,9	299	660,5	129	86,7	378	833,8

H30D Circular truss - Allowable Loading

Diameter		3 Suspension Points				4 Suspension Points				6 Suspension Points				8 Suspension Points				10 Suspension Points			
		UDL		CPL		UDL		CPL		UDL		CPL		UDL		CPL		UDL		CPL	
m	ft	kg/m	lbs/ft	kg	lbs	kg/m	lbs/ft	kg	lbs	kg/m	lbs/ft	kg	lbs	kg/m	lbs/ft	kg	lbs	kg/m	lbs/ft	kg	lbs
4	13.1	115	77,1	317	699,8	204	137,3	456	1006,3	409	275,3	686	1513,3	621	417,7	839	1852,5	829	558,1	938	2070,3
6	19.7	58	38,7	231	510,0	109	73,7	347	767,0	238	160,5	565	1246,8	379	254,9	731	1612,9	520	349,9	847	1870,6
8	26.2	34	22,9	181	400,3	68	45,9	280	618,8	159	106,7	480	1059,3	262	176,2	647	1427,6	368	247,6	773	1705,6
10	32.8	22	14,7	149	328,9	46	31,1	235	518,0	114	76,4	417	920,3	194	130,5	580	1280,0	278	187,4	710	1567,0
12	39.4	15	10,0	126	278,7	33	22,3	202	444,9	85	57,4	357	789,0	150	101,2	484	1069,0	220	148,1	610	1346,1
14	45.9	10	7,1	109	241,5	25	16,6	176	389,6	62	41,6	302	667,3	112	75,6	412	909,5	177	119,4	520	1148,4

X30V Circular truss - Allowable Loading

Diameter		3 Suspension Points				4 Suspension Points				6 Suspension Points				8 Suspension Points				10 Suspension Points			
		UDL		CPL		UDL		CPL		UDL		CPL		UDL		CPL		UDL		CPL	
m	ft	kg/m	lbs/ft	kg	lbs	kg/m	lbs/ft	kg	lbs	kg/m	lbs/ft	kg	lbs	kg/m	lbs/ft	kg	lbs	kg/m	lbs/ft	kg	lbs
4	13.1	189	127,0	576	1272,4	306	205,9	759	1676,0	548	369,1	1003	2213,1	787	529,5	1135	2505,1	1020	686,4	1210	2670,7
6	19.7	103	69,1	445	982,4	176	118,7	619	1366,2	337	227,0	882	1947,0	499	335,8	1043	2302,5	657	442,4	1141	2518,4
8	26.2	64	43,4	362	798,5	116	78,2	522	1151,7	235	157,8	787	1737,1	357	240,0	965	2129,6	477	321,1	1079	2382,1
10	32.8	44	29,6	304	671,4	82	55,5	450	994,2	175	117,5	710	1567,2	272	183,3	897	1980,3	370	248,8	1024	2259,5
12	39.4	32	21,2	262	578,3	62	41,4	392	865,6	136	91,5	606	1338,8	217	146,1	817	1804,0	299	200,9	973	2148,5
14	45.9	23	15,8	230	507,2	45	30,2	329	726,9	105	71,0	515	1137,5	178	119,9	697	1538,7	248	167,0	877	1936,2

H30V Circular truss - Allowable Loading

Diameter		3 Suspension Points				4 Suspension Points				6 Suspension Points				8 Suspension Points				10 Suspension Points			
		UDL		CPL		UDL		CPL		UDL		CPL		UDL		CPL		UDL		CPL	
m	ft	kg/m	lbs/ft	kg	lbs	kg/m	lbs/ft	kg	lbs	kg/m	lbs/ft	kg	lbs	kg/m	lbs/ft	kg	lbs	kg/m	lbs/ft	kg	lbs
4	13.1	188	126,3	575	1268,3	305	205,2	757	1671,9	547	368,4	1001	2209,5	786	528,8	1133	2502,1	1019	685,7	1209	2668,1
6	19.7	102	68,4	443	977,6	175	118,0	617	1361,3	336	226,3	880	1942,3	498	335,1	1041	2298,3	656	441,7	1139	2514,8
8	26.2	63	42,7	359	793,3	115	77,5	519	1146,1	233	157,1	784	1731,5	356	239,3	962	2124,4	476	320,4	1077	2377,5
10	32.8	43	28,8	302	665,9	81	54,8	448	988,2	174	116,8	707	1560,9	271	182,6	894	1974,3	369	248,0	1021	2254,0
12	39.4	30	20,5	259	572,6	60	40,7	393	867,4	135	90,8	643	1419,9	216	145,4	835	1843,3	297	200,2	970	2142,3
14	45.9	22	15,1	227	501,3	46	31,3	350	772,0	108	72,8	590	1301,6	177	119,2	783	1728,0	247	166,3	924	2040,7

All loading figures are based on Uniformly Divided Suspension Points and a suspended load in each of the fields. In all other cases, this loading data is NOT valid. If loads are unevenly divided, instability will occur. For more details and loading figures of other diameters, please contact our engineering department.

- The absence of diagonal braces at the top and/or bottom side of the truss means a dramatic reduction in the allowable loading; a structural report per situation is required for these models.
- Loading figures are based on Eurocode; to comply with BS 7905-2 / ANSI E1.2-2006 / CWA 15902-2, the loading data must be multiplied by 0.85.
- Truss orientation apex-up/down. Truss 100% horizontal.

H40D Circular truss - Allowable Loading

Diameter		3 Suspension Points				4 Suspension Points				6 Suspension Points				8 Suspension Points				10 Suspension Points			
		UDL		CPL		UDL		CPL		UDL		CPL		UDL		CPL		UDL		CPL	
m	ft	kg/m	lbs/ft	kg	lbs	kg/m	lbs/ft	kg	lbs	kg/m	lbs/ft	kg	lbs	kg/m	lbs/ft	kg	lbs	kg/m	lbs/ft	kg	lbs
4	13.1	179	120,8	521	1149,1	304	204,6	717	1582,1	573	385,8	1007	2223,4	842	567,0	1181	2607,6	1106	744,4	1286	2838,1
6	19.7	94	63,3	390	861,4	170	114,2	565	1247,4	344	231,7	859	1897,0	526	353,7	1060	2339,4	705	474,3	1190	2627,1
8	26.2	58	38,7	312	687,7	109	73,3	466	1028,4	235	157,9	749	1653,3	370	249,2	961	2120,7	506	340,5	1108	2444,9
10	32.8	38	25,8	259	571,5	76	51,0	396	874,0	172	115,6	619	1367,4	279	187,8	833	1838,9	388	261,2	1036	2286,0
12	39.4	27	18,2	221	488,3	52	35,2	329	726,1	122	82,2	512	1129,6	220	147,8	691	1525,0	311	209,0	868	1917,2
14	45.9	20	13,2	191	422,5	38	25,3	275	607,3	89	59,8	434	958,2	161	108,1	589	1299,6	253	170,2	742	1637,3

H40V Circular truss - Allowable Loading

Diameter		3 Suspension Points				4 Suspension Points				6 Suspension Points				8 Suspension Points				10 Suspension Points			
		UDL		CPL		UDL		CPL		UDL		CPL		UDL		CPL		UDL		CPL	
m	ft	kg/m	lbs/ft	kg	lbs	kg/m	lbs/ft	kg	lbs	kg/m	lbs/ft	kg	lbs	kg/m	lbs/ft	kg	lbs	kg/m	lbs/ft	kg	lbs
4	13.1	115	77,7	318	701,8	430	289,6	1122	2476,1	739	497,6	1398	3085,7	1041	700,4	1535	3389,5	1336	899,1	1610	3554,2
6	19.7	58	39,3	232	512,1	256	172,1	946	2089,4	464	312,0	1264	2791,3	668	449,8	1440	3179,5	869	584,6	1541	3402,0
8	26.2	34	22,8	182	402,6	173	116,1	818	1805,0	328	220,7	1154	2546,9	483	325,3	1356	2993,2	636	427,8	1478	3261,8
10	32.8	21	14,0	146	321,8	125	84,2	719	1587,0	248	166,9	1060	2340,7	373	251,2	1281	2826,9	496	334,1	1419	3132,2
12	39.4	14	9,3	116	255,5	95	63,9	641	1414,7	196	131,8	981	2164,5	301	202,2	1213	2677,5	404	271,9	1365	3012,2
14	45.9	10	6,4	93	206,2	75	50,2	578	1275,0	159	107,2	911	2012,1	249	167,6	1152	2542,5	338	227,6	1314	2900,6

S36V Circular truss - Allowable Loading

Diameter		3 Suspension Points				4 Suspension Points				6 Suspension Points				8 Suspension Points				10 Suspension Points			
		UDL		CPL		UDL		CPL		UDL		CPL		UDL		CPL		UDL		CPL	
m	ft	kg/m	lbs/ft	kg	lbs	kg/m	lbs/ft	kg	lbs	kg/m	lbs/ft	kg	lbs	kg/m	lbs/ft	kg	lbs	kg/m	lbs/ft	kg	lbs
4	13.1	485	326,7	1535	3388,7	766	515,6	1963	4333,2	1335	898,3	2495	5508,5	1891	1272,4	2769	6111,7	2435	1638,5	2919	6443,6
6	19.7	270	182,0	1211	2673,4	451	303,3	1636	3612,3	832	559,8	2236	4936,2	1209	813,8	2580	5694,5	1579	1062,4	2780	6137,6
8	26.2	173	116,4	998	2203,1	302	202,9	1401	3093,3	585	393,7	2025	4469,3	871	586,4	2414	5329,2	1152	775,4	2654	5858,5
10	32.8	117	78,6	816	1800,9	214	144,3	1123	2478,0	440	296,2	1721	3799,3	670	451,1	2268	5006,7	897	603,9	2538	5602,8
12	39.4	79	52,9	658	1452,5	146	98,4	919	2028,8	340	228,7	1423	3142,0	538	362,0	1919	4235,3	729	490,3	2410	5320,8
14	45.9	55	37,3	542	1196,1	105	70,8	771	1702,3	247	166,5	1209	2668,7	444	299,0	1636	3612,0	609	409,5	2059	4546,0

S52SV Circular truss - Allowable Loading

Diameter		3 Suspension Points				4 Suspension Points				6 Suspension Points				8 Suspension Points				10 Suspension Points			
		UDL		CPL		UDL		CPL		UDL		CPL		UDL		CPL		UDL		CPL	
m	ft	kg/m	lbs/ft	kg	lbs	kg/m	lbs/ft	kg	lbs	kg/m	lbs/ft	kg	lbs	kg/m	lbs/ft	kg	lbs	kg/m	lbs/ft	kg	lbs
4	13.1	688	462,7	2325	5131,5	1035	696,5	2806	6195,3	1721	1158,3	3336	7365,1	2390	1608,2	3583	7909,6	3047	2050,2	3712	8195,0
6	19.7	401	269,5	1919	4236,5	631	424,4	2442	5391,8	1095	737,1	3086	6811,9	1549	1042,5	3413	7534,1	1993	1341,5	3592	7929,8
8	26.2	265	178,7	1631	3601,3	435	292,5	2160	4768,2	785	528,5	2869	6333,6	1130	760,7	3258	7191,3	1468	987,7	3479	7680,5
10	32.8	187	125,6	1303	2876,0	321	216,1	1780	3929,0	601	404,8	2680	5915,8	880	592,3	3115	6877,1	1153	775,8	3373	7445,6
12	39.4	126	85,1	1059	2337,3	233	156,7	1463	3229,7	480	323,3	2250	4965,9	714	480,7	2984	6588,0	944	635,0	3272	7223,9
14	45.9	90	60,6	880	1943,3	168	113,2	1234	2723,2	392	263,6	1915	4226,4	596	401,4	2583	5701,3	794	534,6	3178	7014,4

All loading figures are based on Uniformly Divided Suspension Points and a suspended load in each of the fields. In all other cases, this loading data is NOT valid. If loads are unevenly divided, instability will occur. For more details and loading figures of other diameters, please visit our website.

- The absence of diagonal braces at the top and/or bottom side of the truss means a dramatic reduction in the allowable loading; a structural report per situation is required for these models.
- Loading figures are based on Eurocode; to comply with BS 7905-2 / ANSI E1.2-2006 / CWA 15902-2, the loading data must be multiplied by 0.85.
- Truss orientation apex-up/down. Truss 100% horizontal.

Photo by Christi Mitrea: Standard vision, Linkin Park concert Bucharest

Cantilever loads are a common phenomenon in daily practice. It is sometimes hard to predict what will actually happen with regard to loading and the resulting forces in a cantilever span. As an additional service, we have compiled the loading tables for cantilever loads for all our truss types. By using the tables in the following section, you will be able to apply cantilever loads safely and securely. Please be sure to read and understand these loading tables before applying cantilever loads in practise.

E20

E20D - Cantilever load		
l_k (m)	P (kg)	q (kg/m)
0,5	162,3	323,9
1,0	93,3	161,2
1,5	64,9	78,2
2,0	49,4	45,6
2,5	39,5	29,6
3,0	32,6	20,6

E20V - Cantilever load		
l_k (m)	P (kg)	q (kg/m)
0,5	187,1	374,1
1,0	187,1	186,1
1,5	140,0	123,4
2,0	108,8	92,1
2,5	88,6	63,8
3,0	74,3	45,3

X30

X30D - Cantilever load		
l_k (m)	P (kg)	q (kg/m)
0,5	633,5	1697,9
1,0	387,1	631,2
1,5	277,6	318,2
2,0	215,6	191,2
2,5	175,4	127,0
3,0	147,2	90,1

X30V - Cantilever load		
l_k (m)	P (kg)	q (kg/m)
0,5	979,7	1959,4
1,0	767,8	977,4
1,5	574,5	611,6
2,0	457,9	380,9
2,5	379,6	259,9
3,0	323,4	188,4
3,5	280,8	142,5

H30

H30D - Cantilever load		
l_k (m)	P (kg)	q (kg/m)
0,5	837,8	1696,8
1,0	520,0	834,8
1,5	375,6	425,0
2,0	292,9	256,9
2,5	239,0	171,4
3,0	201,0	122,0

H30V - Cantilever load		
l_k (m)	P (kg)	q (kg/m)
0,5	979,2	1958,3
1,0	979,2	976,3
1,5	769,9	649,0
2,0	617,2	485,3
2,5	513,9	347,2
3,0	439,2	252,8
3,5	382,5	191,9

H40

H40D - Cantilever load		
l_k (m)	P (kg)	q (kg/m)
0,5	1020,9	2182,2
1,0	670,0	1018,1
1,5	497,4	536,7
2,0	394,4	332,0
2,5	325,7	225,4
3,0	276,6	162,7
3,5	239,6	122,6
4,0	210,6	95,4

H40V - Cantilever load		
l_k (m)	P (kg)	q (kg/m)
0,5	1259,6	2519,1
1,0	1256,5	1256,5
1,5	980,6	835,6
2,0	802,7	624,3
2,5	678,2	436,7
3,0	586,1	322,8
3,5	515,0	248,1
4,0	458,4	196,5

H40R - Cantilever load		
l_k (m)	P (kg)	q (kg/m)
0,5	1259,5	2518,9
1,0	1256,4	1256,3
1,5	980,4	835,4
2,0	802,5	624,1
2,5	677,9	436,5
3,0	585,7	322,6
3,5	514,6	247,9
4,0	458,0	196,3

- Loading figures are only valid for cantilever spans smaller than the resp. field spans
- A separate calculation is required in the following cases:
  - When dynamic loads or wind loads are involved
  - When more than two supporting points are applied
  - When load is applied in the resp. field spans
- The self-weight of the trusses has been taken into account

S36

S36R - Cantilever load		
l_k (m)	P (kg)	q (kg/m)
0,5	1678,2	3968,1
1,0	1278,6	1672,8
2,0	861,1	633,5
2,5	737,8	450,7
3,0	643,9	337,4
3,5	569,8	262,0
4,0	509,7	209,0
4,5	459,8	170,4

S36V - Cantilever load		
l_k (m)	P (kg)	q (kg/m)
0,5	1677,7	3966,8
1,0	1277,6	1671,4
2,0	859,3	632,1
2,5	735,6	449,3
3,0	641,3	336,1
3,5	566,8	260,6
4,0	506,4	207,7
4,5	456,2	169,0

B100RV

B100RV - Cantilever load		
l_k (m)	P (kg)	q (kg/m)
1,0	3713,2	4230,4
1,5	3298,0	2628,2
2,0	2963,3	1844,0
3,0	2456,0	1086,3
4,0	2088,7	727,4
5,0	1809,4	523,7
6,0	1589,1	395,3
7,0	1410,2	308,5

S52

S52F - Cantilever load		
l_k (m)	P (kg)	q (kg/m)
1,0	1249,6	1595,6
2,0	833,1	617,5
3,0	618,3	326,3
4,0	485,8	200,5
4,5	436,7	162,7
5,0	395,1	134,3
5,5	359,4	112,4
6,0	328,4	95,0

S52SV - Cantilever load		
l_k (m)	P (kg)	q (kg/m)
1,0	1540,9	1881,2
2,0	1119,8	762,5
3,0	872,6	424,6
4,0	708,9	271,4
4,5	645,8	224,0
5,0	591,6	187,7
5,5	544,3	159,3
6,0	502,7	136,6

S52V - Cantilever load		
l_k (m)	P (kg)	q (kg/m)
1,0	1514,3	1861,3
2,0	1091,4	749,2
3,0	846,3	415,1
4,0	685,0	264,3
4,5	623,2	217,7
5,0	570,0	182,2
5,5	523,8	154,3
6,0	483,2	132,1

S66

S66R / S66V- Cantilever load		
l_k (m)	P (kg)	q (kg/m)
1,0	1679,5	1980,6
2,0	1274,4	830,9
3,0	1019,6	474,4
4,0	843,4	309,2
4,5	773,9	257,2
5,0	713,4	217,2
5,5	660,2	185,6
6,0	613,0	160,1

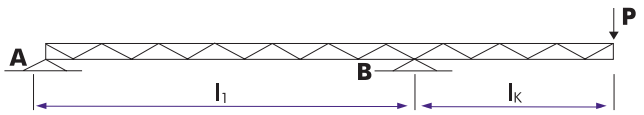

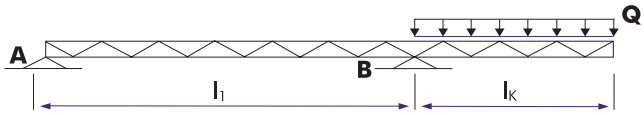

Loading figures only valid for static loads and spans with two supporting points.

LOADING	
Single load ballast at point A	$(P \times l_k / l_1) \times 1,5$
Distributed load over length l_1	$\left(\frac{Q \times l_k}{2 \times l_1}\right) \times 1,5$

P = kg or N
l = mm or m
Q = total UDL

Point A should have enough ballast weight to avoid the risk of uplifting caused by the cantilever weight P/q.

Photo: RSL, The Netherlands.

Corners

All ProlyteStructures truss Series' are complemented by a broad range of standard corners, box corners and book corners. Combining corners with straight or curved trusses makes it possible to construct an endless variety of structure or grid configurations.

Standard corners

The standard corner range provides 2-to-6-way corners at several angles, from 45 to 135 degrees. In addition, ProlyteStructures manufactures a number of specially designed corners, such as the pyramid corner and swivel corner. For more information on these corners, or on custom-made corners, please contact Prolyte Group's Internal Sales department.

Box corners

Invented by ProlyteStructures, the box corner system* is revolutionary. A 6-way cube is combined with specially constructed tubes by means of an internal screw thread and hexagon socket bolts. One ProlyteStructures box corner can be converted into a 2-to-6-way corner as desired simply by mounting the female or male receivers to the corner. The flexibility and fixed dimensions of the box corner make it a costefficient investment. Box corners are capable of taking 100% of the applied load in a vertical or horizontal direction. This makes the box corner a fully-fledged construction element, unlike traditional types of corners.

Book corners

The ProlyteStructures book corner enables configuration with angle flexibility. Angles ranging from 0 to 180 degrees can be made using the same corner. The attachments are bolted to the corner, using male or female receivers. The required angle is set with the additional attachment set. The book corner is not designed as a loadbearing element and therefore cannot be part of a structural component. (The book corner must be supported on both sides of the hinge.)

***The box corner system is patented by ProlyteStructures.**

Photo: Riegler Messebau, Italy. Project: Introduction new Porsche.

30 SERIES

40 SERIES

S36V

S52F

B100RV

S100F

LADDER CORNERS X/H30 / H40L

Ladder Corners														
measurements in mm	A	B	C	D	E	F	G	H	J	K	L	M	N	P
X/H30L	1000	877	913	500	449	471	479	949	300	498	210	333	380	710
H40L	1200	1078	1112	600	549	572	579	1149	258	525	210	376	439	810

C001U - 45°

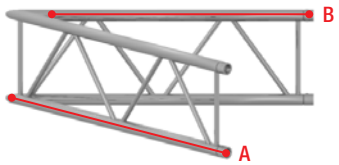

C002U - 60°

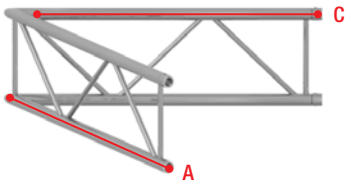

C003U - 90°

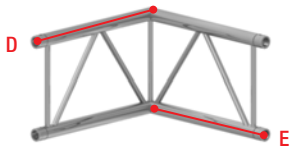

C004U - 120°

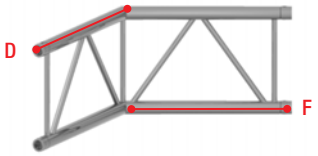

C005U - 135°

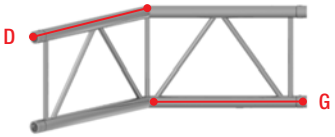

C016U

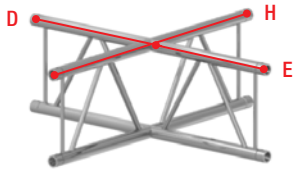

C017U

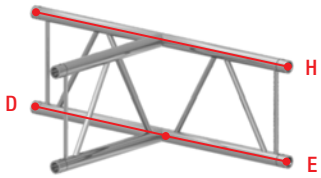

C001F - 45°

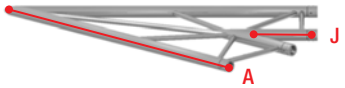

C002F - 60°

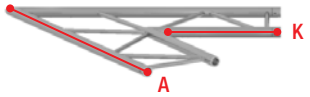

C003F - 90°

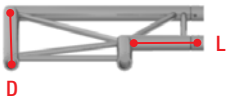

C004F - 120°

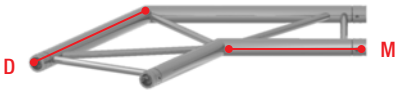

C005F - 135°

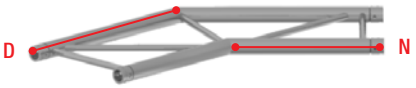

C016F

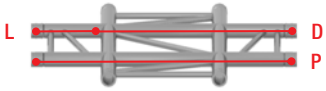

C017F

U = LADDER UP
F = LADDER FLAT

Triangular Corners										
measurements in mm	A	B	C	D	E	F	G	H	K	L
E20D	800	264	415	400	178	272	308	203	578	603
AstraLite3	400	800	600	575	550	575				
X/H30D	1000	300	498	500	210	333	380	242	710	742
H40D	1200	258	525	600	210	376	439	255	810	855

C001 - 45°

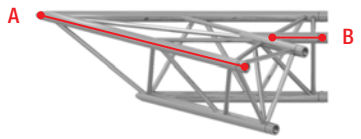

C002 - 60°

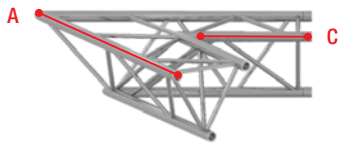

C003 - 90°

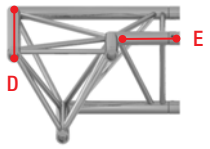

C004 - 120°

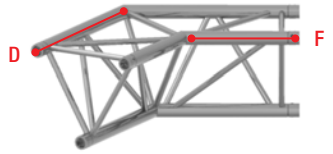

C005 - 135°

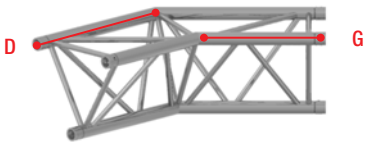

C006

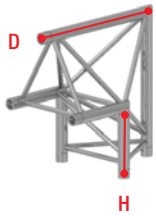

C007

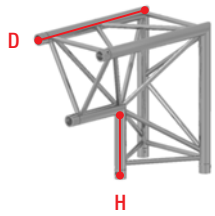

C010

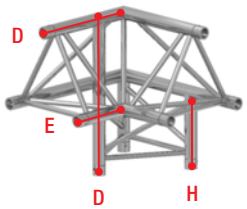

C011

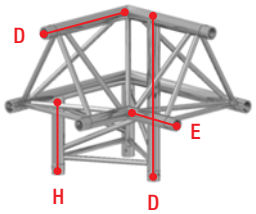

C012

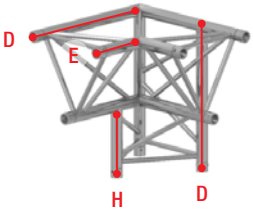

C013

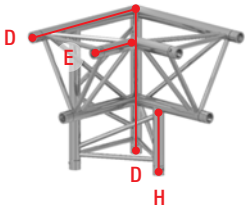

C014

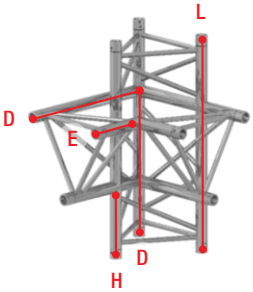

Triangular Corners										
measurements in mm	A	B	C	D	E	F	G	H	K	L
E20D	800	264	415	400	178	272	308	203	578	603
AstraLite3	400	800	600	575	550	575				
X/H30D	1000	300	498	500	210	333	380	242	710	742
H40D	1200	258	525	600	210	376	439	255	810	855

C015

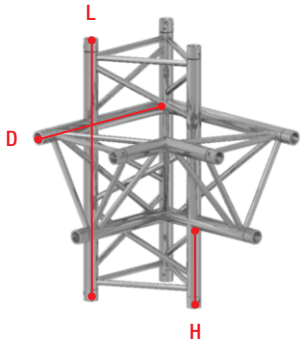

C016

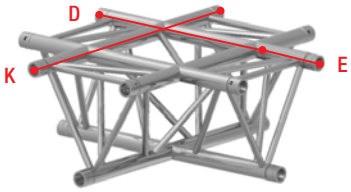

C017

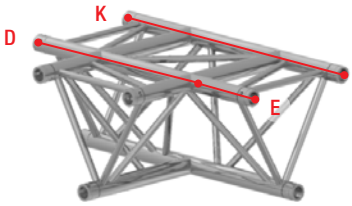

C018

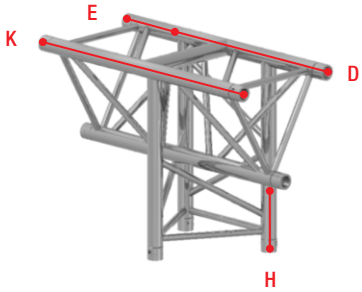

C019

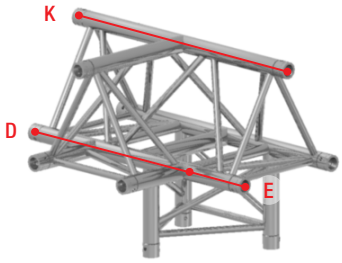

C020

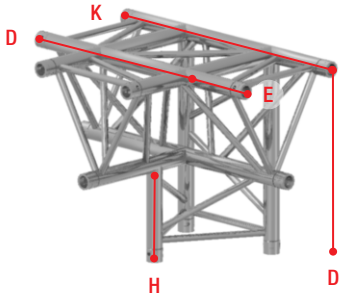

C021

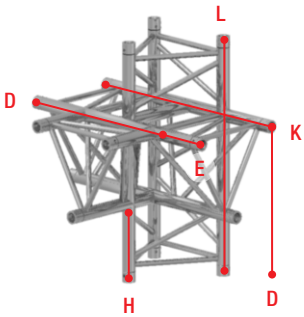

C022

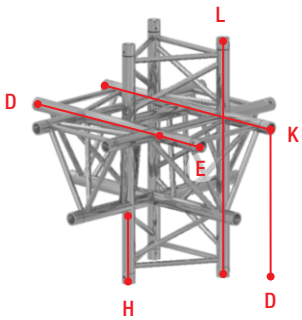

C023

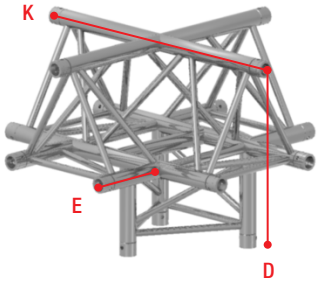

C024

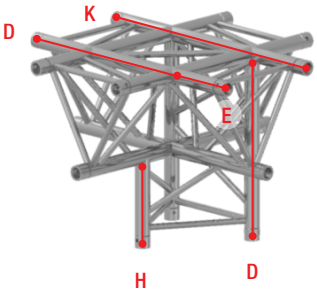

C039

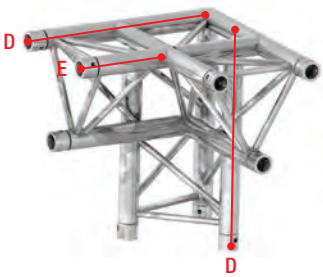

Square Corners								
measurements in mm	A	B	C	D	E	F	G	H
E20V	800	264	415	400	178	272	308	578
X/H30V	1000	300	498	500	210	333	380	710
H40V	1200	258	525	600	210	376	439	810

C001 - 45°

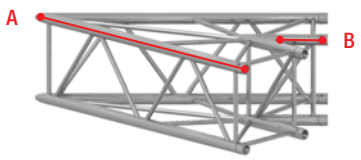

C002 - 60°

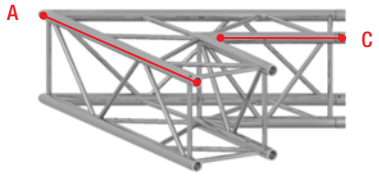

C003 - 90°

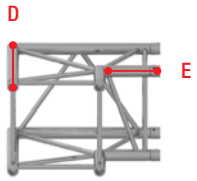

C004 - 120°

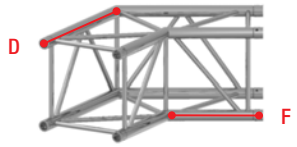

C005 - 135°

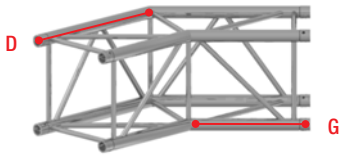

C012

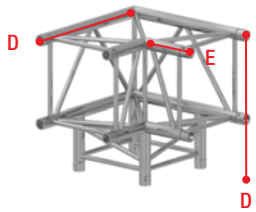

C016

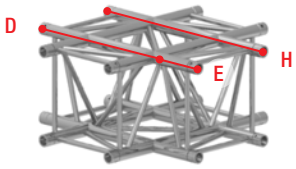

C017

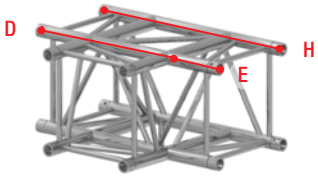

C020

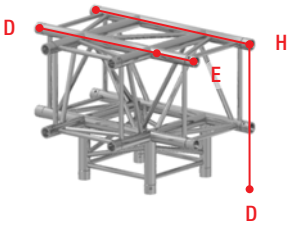

C022

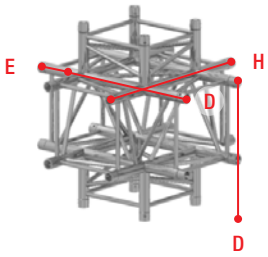

C024

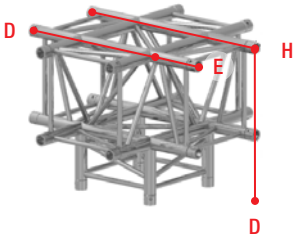

Standard Corners - S36 Series					
measurements in mm	A	B	C	D	E
S36R	475	125	600	429	172
S36V	475	125	600	475	125

S36R - C003

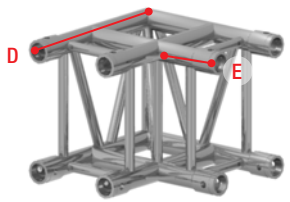

S36R - C007

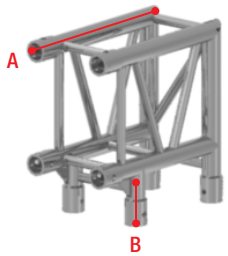

S36R - C012

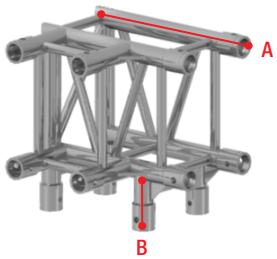

S36R - C013

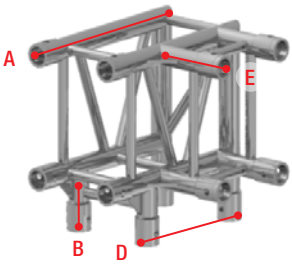

S36R - C016

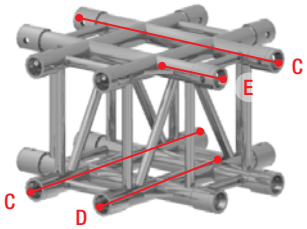

S36R - C017

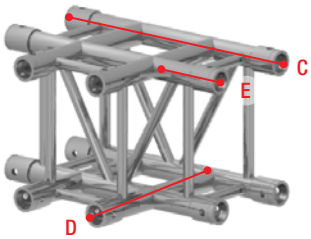

S36V - C003

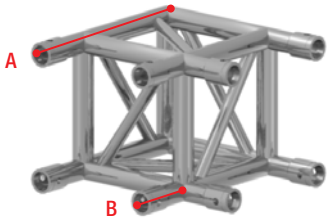

S36V - C012

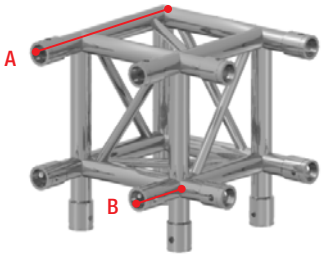

Standard Corners - S52F Series						
measurements in mm	A	B	C	D	E	F
S52F	740	655	580	305	85	530

S52F - C003

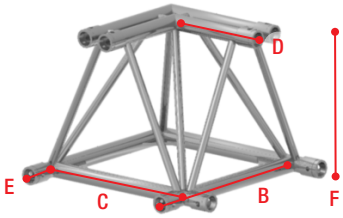

S52F - C016

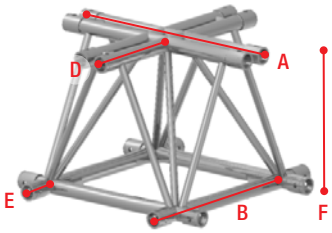

S52F - C017

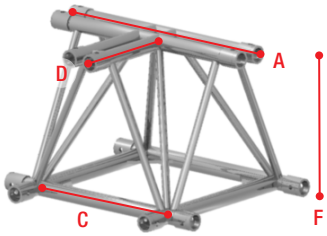

Standard Corners - S100F Series						
measurements in mm	A	B	C	D	E	F
S100F	740	655	570	305	85	1010

Standard Corners - B100 Series						
measurements in mm	A	B	C	D	E	F
B100	740	655	580	305	85	1010

S100F - C016

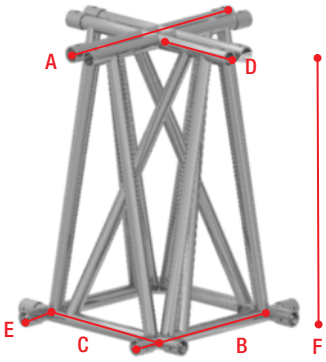

S100F - C017

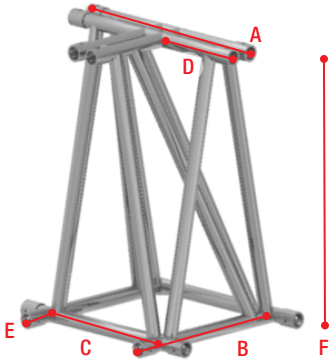

B100 - C016

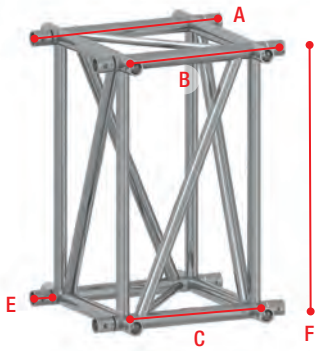

BOX - 30V

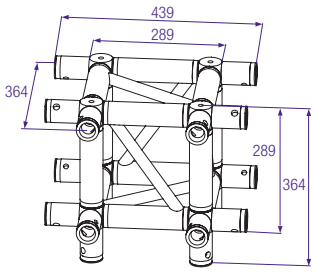

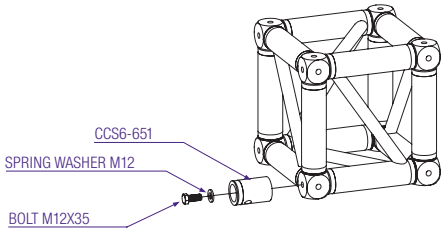

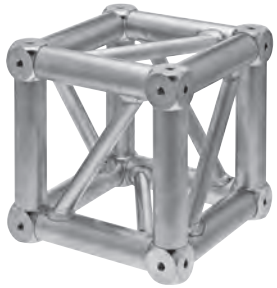

BOX - 30L

Ladder box corner for X•H30 truss. Measurements.

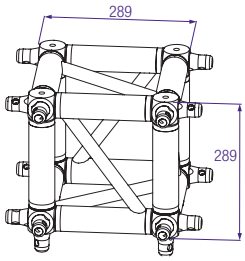

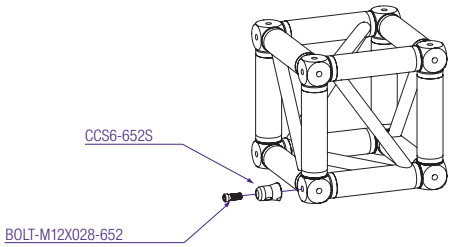

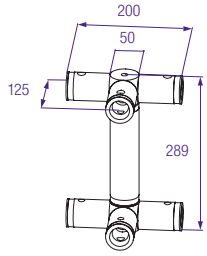

BOX - 30 - KIT

Kit for fixation and assembly. CCS6-651 to box 30V.

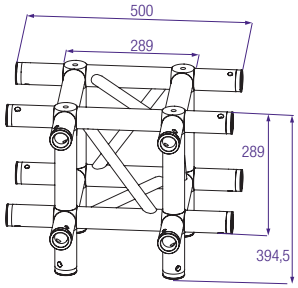

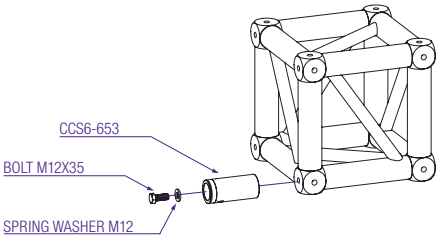

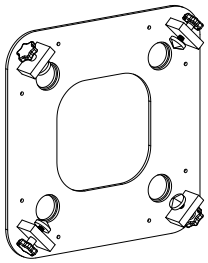

BOX - 30V - ATT

Boxcorner attachment, pre- assembled CCS6-651 couplers.

Box corner for X • H30V truss. Measurements.

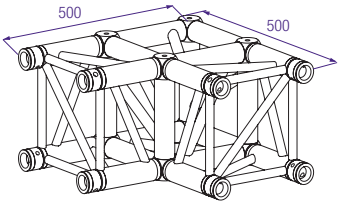

Assembly.

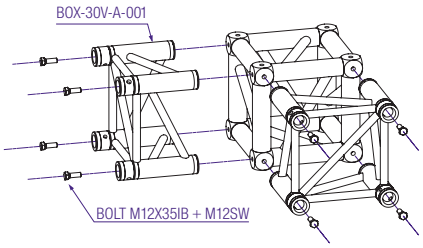

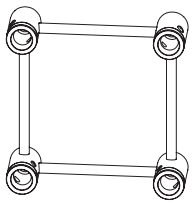

Box corner with attachments with same dimensions as standard corner.

Technical specifications - 30V Box Corners

	0-way		2-way		3-way		4-way		5-way		6-way		coupler	bolt	spring
	kg	lbs	kg	lbs	kg	lbs	kg	lbs	kg	lbs	kg	lbs			washer
BOX - 30V - A001	9,9	21.2	12,2	26.9	13,5	29.8	14,8	32.7	16,1	35.5	17,4	38.4	CCS6 - 651	M12x35	M12
													CCS6 - 652	BM12x028 - 652	-
													CCS6 - 653	M12x35	M12

1 inch = 25,4 mm | 1 m = 3.28 ft | 1 lbs = 0,453 kg | 1 daN = 10 N ~ 1 kg

BOX - 40V

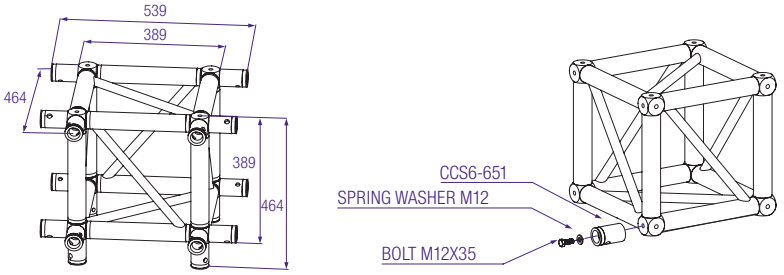

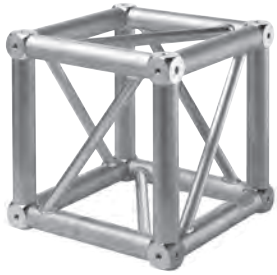

BOX - 40L

Ladder box corner for H40 truss. Measurements.

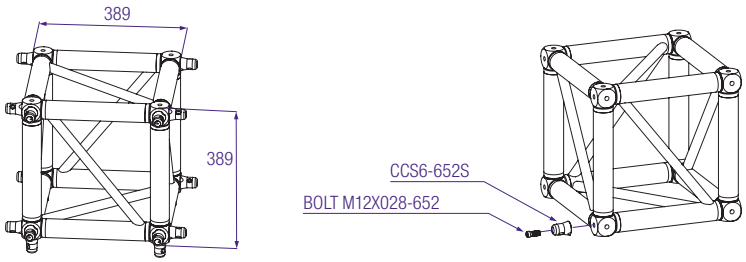

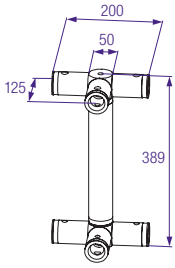

BOX - 40 - KIT

Kit for fixation and assembly. CCS6-651 to box 40V.

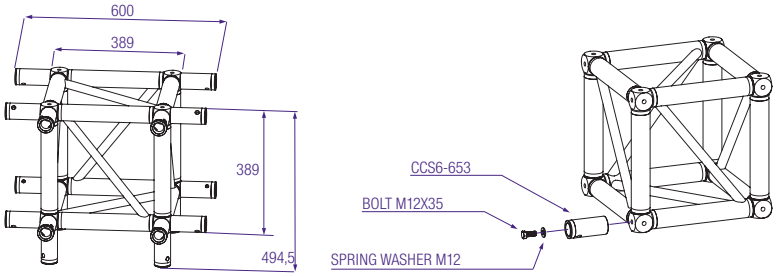

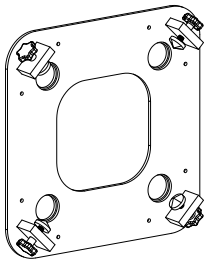

BOX - 40V - ATT

Boxcorner attachment, pre- assembled CCS6-651 couplers.

Box corner for H40V truss. Measurements.

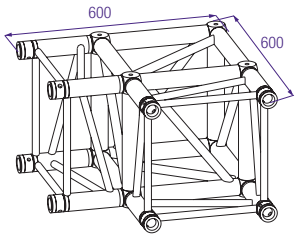

Assembly.

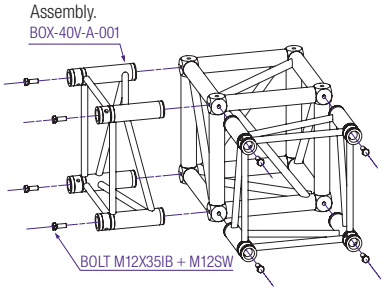

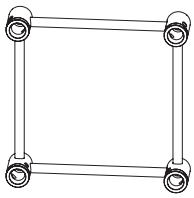

Box corner with attachments with same dimensions as standard corner.

Technical specifications - 40V Box Corners

	0-way		2-way		3-way		4-way		5-way		6-way		coupler	bolt	spring
	kg	lbs	kg	lbs	kg	lbs	kg	lbs	kg	lbs	kg	lbs			washer
BOX - 40V - A001	11,5	25.4	14,1	31.1	15,4	34.0	16,7	36.9	18,0	39.7	19,3	42.6	CCS6 - 651	M12x35	M12
													CCS6 - 652	BM12x028 - 652	-
													CCS6 - 653	M12x35	M12

1 inch = 25,4 mm | 1 m = 3.28 ft | 1 lbs = 0,453 kg | 1 daN = 10 N ~ 1 kg

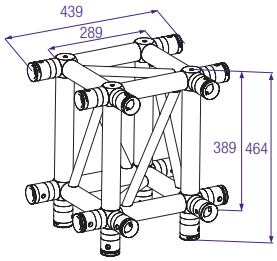

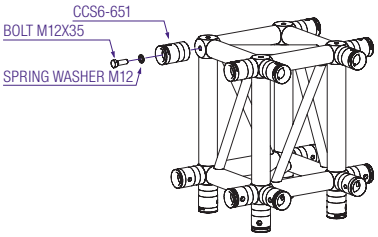

BOX - 40R

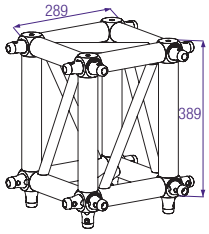

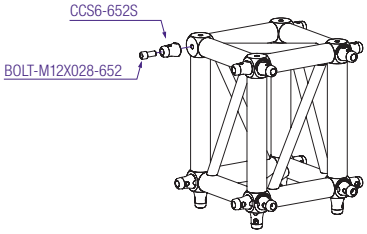

H40R - MPT - 010 - ADAP

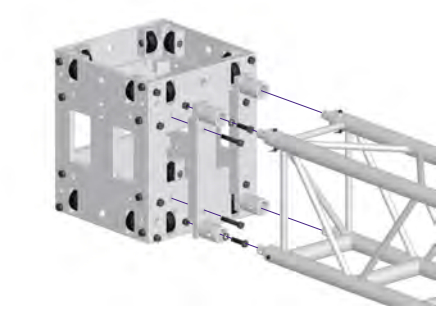

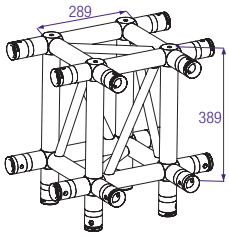

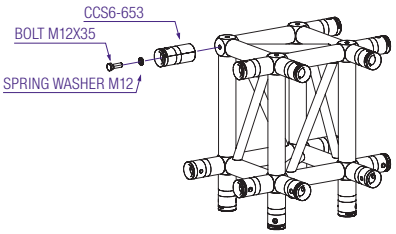

BOX - 40R - A - 001

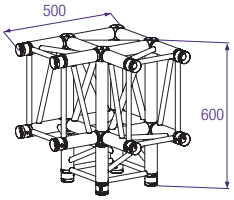

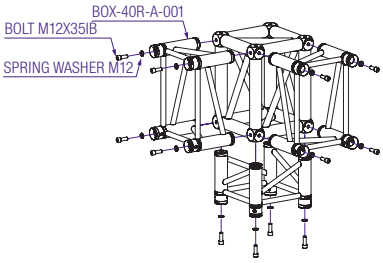

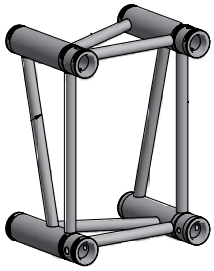

BOX - 36V

Box corner for S36V truss.

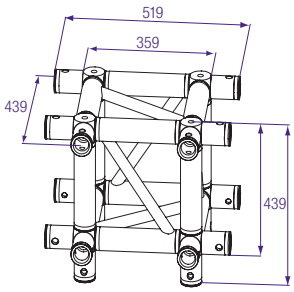

Assembly

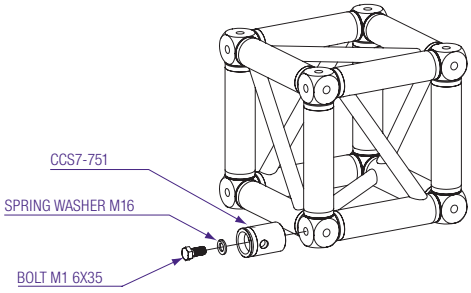

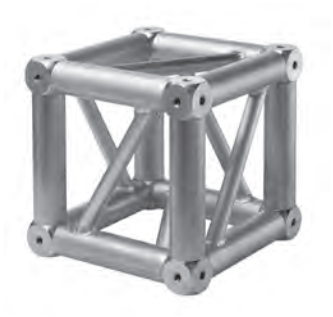

BOX - 36R

Box corner for S36R truss.

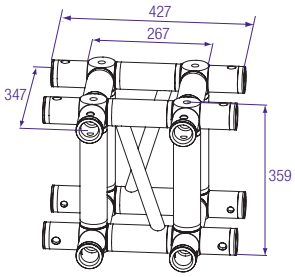

Assembly

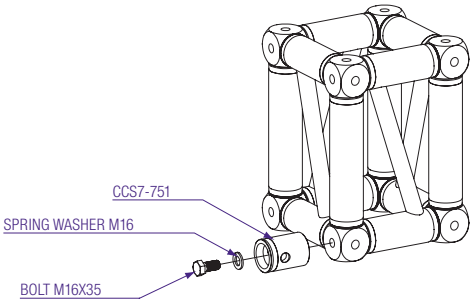

ADAPTER S36R
Also available for a symmetrical setup with female couplers or an asymmetrical setup with female couplers.

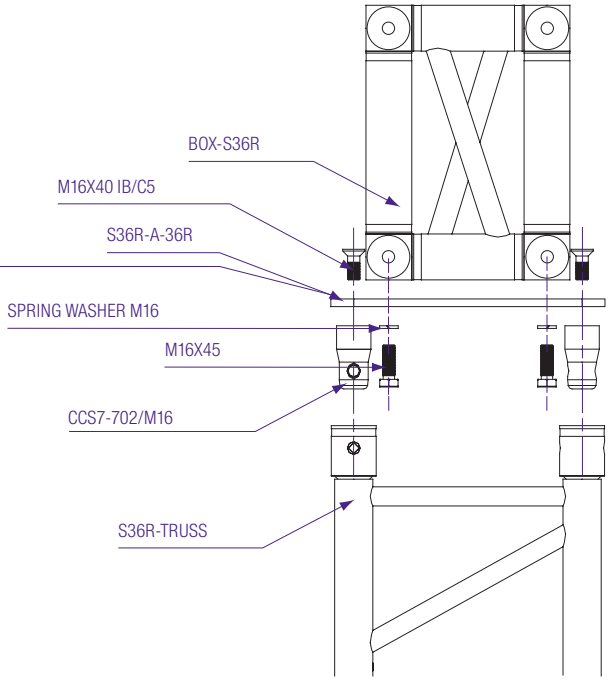

Technical specifications S36 Box Corners

	0-way		2-way		3-way		4-way		5-way		6-way		coupler	bolt	spring
	kg	lbs	kg	lbs	kg	lbs	kg	lbs	kg	lbs	kg	lbs			washer
Box - 36R	15,9	35.1	17,7	39.1	19,5	43.0	21,2	46.8	23,0	50.8	24,8	54.7	CCS7-751	M16x35	M16
Box - 36R	21,0	46.4	22,8	50.3	24,5	54.1	26,3	58.1	28,1	62.0	29,9	66.0	CCS7-751	M16x35	M16

1 inch = 25,4 mm | 1 m = 3.28 ft | 1 lbs = 0,453 kg | 1 daN = 10 N ~ 1 kg

BOX - 52V

Box corner for S52/SV truss.

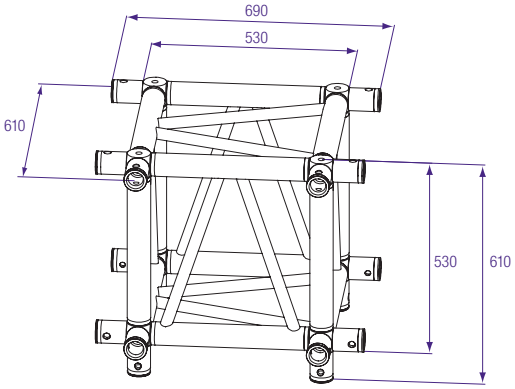

Technical specifications - S52 Box Corners															
	0-way		2-way		3-way		4-way		5-way		6-way		coupler	bolt	spring
	kg	lbs	kg	lbs	kg	lbs	kg	lbs	kg	lbs	kg	lbs			washer
Box - 52V / SV	22,7	50.1	24,5	54.1	26,3	58.1	28,0	61.8	29,8	65.8	31,6	69,8	CCS7-751	M16x35	M16

1 inch = 25,4 mm | 1 m = 3.28 ft | 1 lbs = 0,453 kg | 1 daN = 10 N ~ 1 kg

BOX - 66R

Box corner for S66R truss.

BOX - 66V

Box corner for S66V truss.

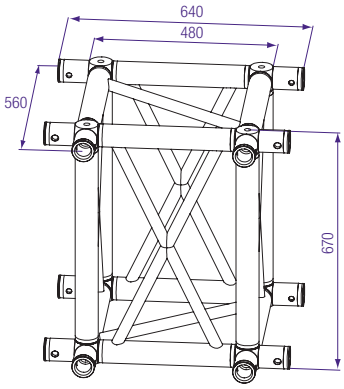

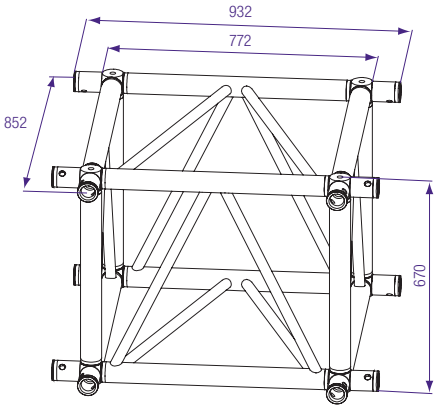

Technical specifications - S66 Box Corners															
	0-way		2-way		3-way		4-way		5-way		6-way		coupler	bolt	spring
	kg	lbs	kg	lbs	kg	lbs	kg	lbs	kg	lbs	kg	lbs			washer
Box - 66R	24,2	53.4	26	57.4	29,6	65.3	31,3	69.1	33,1	73.1	34,9	77	CCS7-751	M16x35	M16
Box - 66V	28,2	62.3	30	66.2	31,8	70.2	33,5	74	35,3	77.9	37,1	81.9	CCS7-751	M16x35	M16

1 inch = 25,4 mm | 1 m = 3.28 ft | 1 lbs = 0,453 kg | 1 daN = 10 N ~ 1 kg

BOOK - 30D/V

Assembly

Book corners can not be used as load bearing component. Loading should be supported form both sides of the book corner.

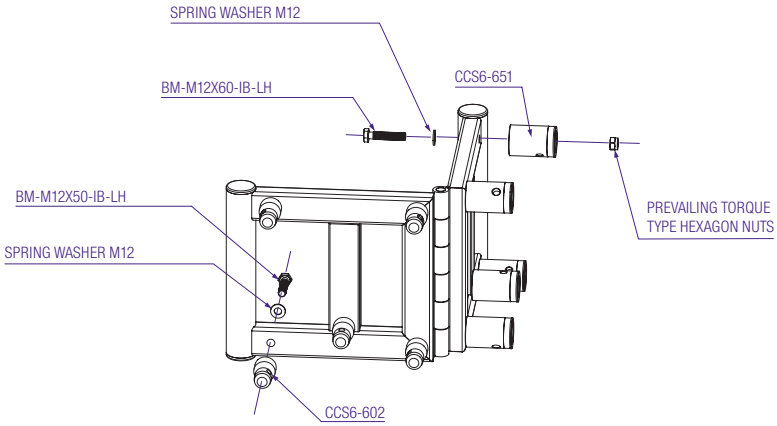

Book corner for 30D/V truss.

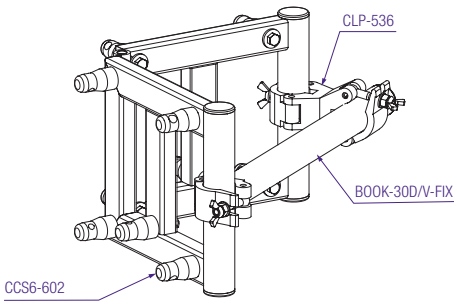

Technical specifications - Book Corners 30D/V

	kg	lbs	male coupler	bolt	female coupler	bolt	nut	spring washer
Book - 30D/V	12,0	26.5	CCS6 - 602	M12x55	CCS6 - 651	M12x60	M12	M12

1 inch = 25,4 mm | 1 m = 3.28 ft | 1 lbs = 0,453 kg | 1 daN = 10 N ~ 1 kg

BOOK - 40 D/V

Assembly

Book corner for 40D/V truss.

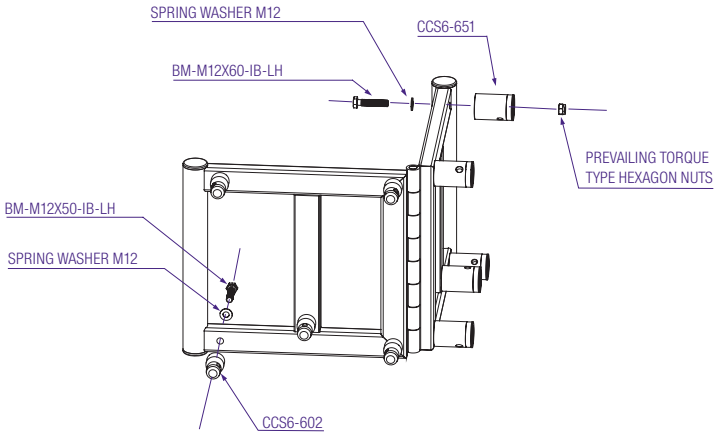

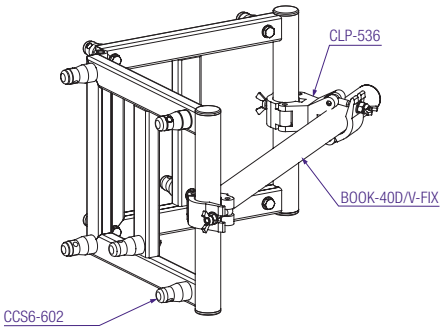

Technical specifications - Book Corners 40D/V

	kg	lbs	male coupler	bolt	female coupler	bolt	nut	spring washer
Book -40D/V	15,5	34.2	CCS6 - 602	M12x55	CCS6 - 651	M12x60	M12	M12

1 inch = 25,4 mm | 1 m = 3.28 ft | 1 lbs = 0,453 kg | 1 daN = 10 N ~ 1 kg

BOOK - 36R/V

Book corner for 36V truss.

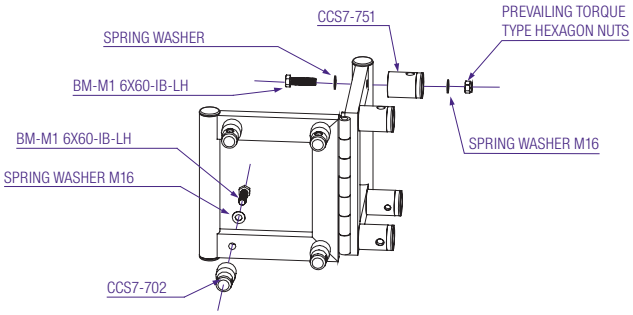

Book corner for 36R truss.

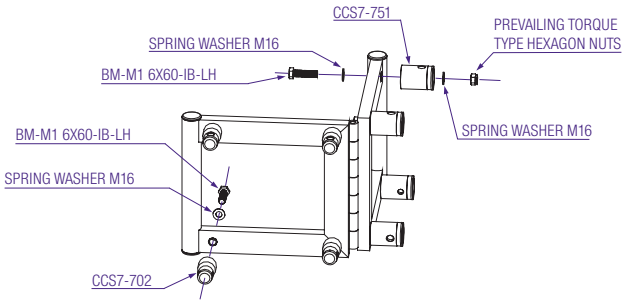

Technical specifications - Book Corners 36R/V

	kg	lbs	male coupler	bolt	female coupler	bolt	nut	spring washer
Book - 36R	16,2	35.8	CCS7-702	M16x60	CCS7-751	M16x60	M16	M16
Book - 36V	17,2	38.0	CCS7-702	M16x60	CCS7-751	M16x60	M16	M16

1 inch = 25,4 mm | 1 m = 3.28 ft | 1 lbs = 0,453 kg | 1 daN = 10 N ~ 1 kg

BOOK - 52F

Book corner for 52F truss.

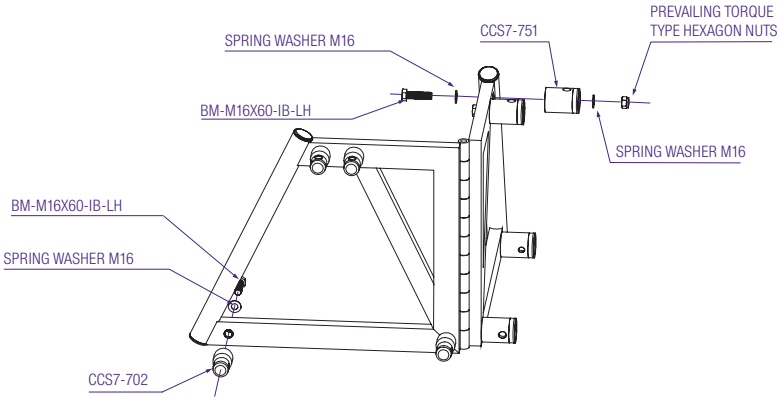

Technical specifications - Book Corners 52F

	kg	lbs	male coupler	bolt	female coupler	bolt	nut	spring washer
Book - 52F	21,5	47.5	CCS7-702	M16x60	CCS7-751	M16x60	M16	M16
Book - 52S/SV	20,7	45.7	CCS7-702	M16x60	CCS7-751	M16x60	M16	M16

1 inch = 25,4 mm | 1 m = 3.28 ft | 1 lbs = 0,453 kg | 1 daN = 10 N ~ 1 kg

Photo: © the Prolyte Group. Omke Oudeman.

Couplers

When ProlyteStructures designed the original Conical Coupling System (CCS®), it represented a huge step forward in the development of truss systems. Even today, the now much-copied Conical Coupling System is unrivalled in efficiency, strength and ease of assembly. Exhibiting significant advantages over other types of connection systems, the innovative Conical Coupling System has gained a worldwide reputation for excellence and efficiency. The Conical Coupling System is available for all ProlyteStructures truss systems and is deliverable in 3 sizes: CCS4, CCS6 and CCS7. A variety of special coupling configurations is also available. With strong and rigid connections, the Conical Coupling System makes the assembly of your truss system safe, fast and easy.

Accessories

ProlyteStructures accessories are a range of additional products that can be used in combination with the ProlyteStructures trusses or other complementary products. This section presents a selection of accessories that might prove helpful in the assembly or setting-up of your truss constructions. ProlyteStructures accessories all have one thing in common: they have been developed to help you realize the many possibilities and full potential offered by your ProlyteStructures truss system. All ProlyteStructures accessories are designed and manufactured to the highest industry standards, and all comply with safety regulations and, where applicable, are TUV approved. ProlyteStructures accessories are divided into four categories: clamps, followspot chairs, exhibition products and rigging hardware.

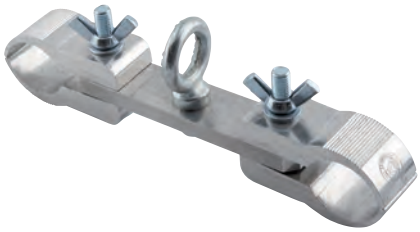

A03/ACS2	weight = 1,06 kg
Astralite3 ceiling support.	SWL 300 kg

qrp51	weight = 0,05 kg
Quick release pin.	

A0/ACB2	weight = 2,2 kg
Corner brace 2 m.	

A) Flexible straight coupler	
Description	TT3 Push up electrical straight coupler
Product Code	TT3-2629223

Universal lamp adapter (max 5 kg)	
Description	Universal lamp adapter
Product Code	EU3-99759-2

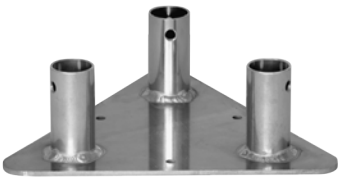

A03-AWP	weight = 1 kg
Baseplate / Wallplate for AstraLite 3	

A0/ACB1	weight = 1,6 kg
Corner brace 1 m.	

Push up live feed coupler (for connecting power input)	
Description	TT3 Push up live feed coupler
Product Code	TT3-2025768 (left) TT3-2025769 (right)

B) Flexible corner coupler	weight = 0,069 kg
Description	TT3 Push up electrical corner coupler (1500 mm with cables)
Product Code	TT3-2632290

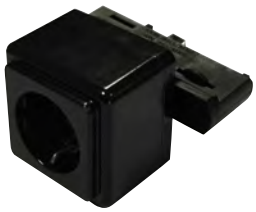

6 A Shucko adapter	
Description	Shucko
Product Code	EU-990920

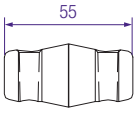

CCS4 - 400	weight = 0,058 kg
Conical coupler	

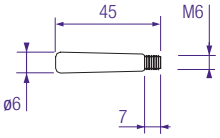

CCS4 - 404	weight = 0,017 kg
Spigot with tread M6 **CCS4 - 404RF** (stainless steel)	To be used with selflocking nut M6

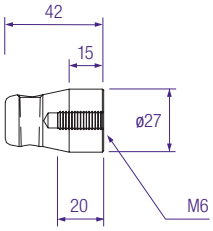

CCS4 - 402	weight = 0,050 kg
Offset half conical coupler	Offset 15 mm, thread M6

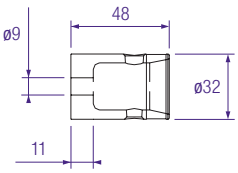

CCS4 - 451	weight = 0,065 kg
Female conical coupler	With 9 mm hole for bolts M8

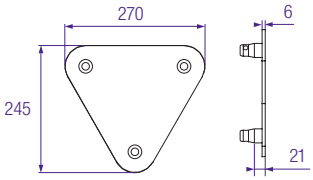

BASE 20D	weight = 0,740 kg
Baseplate for E20D truss	

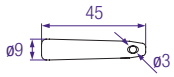

CCS4 - 403	weight = 0,017 kg
Spigot	To be used with CCS6 - 605 safety R-spring

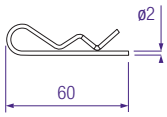

CCS4 - 405	weight = 0,003 kg
Safety R-spring	

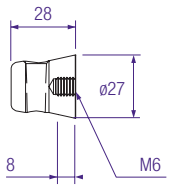

CCS4 - 450	weight = 0,029 kg
Half conical coupler	Ofsett 0 mm, thread M6

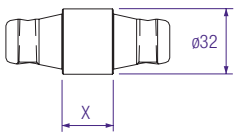

CCS4 - S05 through **CCS4 - S50**	weight = 0,070 - 0,170 kg
Spacers	X = 5 mm to 50 mm in steps of 5 mm

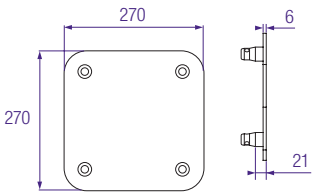

BASE 20V	weight = 1,170 kg
Baseplate for E20V truss	

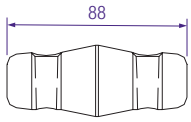

CCS6 - 600	weight = 0,148 kg
Conical coupler	

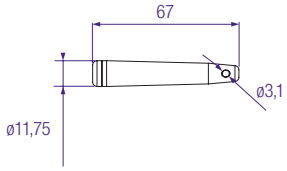

CCS6 - 603	weight = 0,042 kg
Spigot	To be used with CCS6 - 605 safety R-spring

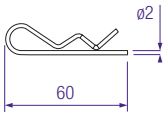

CCS6 - 605	weight = 0,003 kg
Safety R-spring	

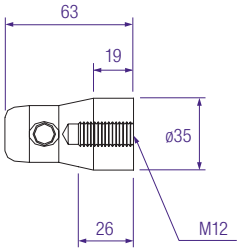

CCS6 - 602	weight = 0,116 kg
Offset half conical coupler	Offset 19 mm, thread M12

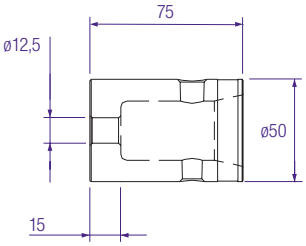

CCS6 - 651	weight = 0,280 kg
Female concical coupler	With 12,5 mm hole for bolts M12

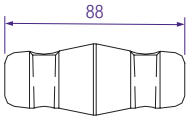

Optional coulors available per 3000 pcs.
The Hybrid coupler is patented.

CCS6 - 600 - H	weight = 0,160 kg
Hybrid coupler, standard in Prolyte blue	

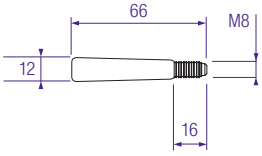

CCS6 - 604	weight = 0,040 kg
Spigot with thread M8 **CCS6 - 604RF** (stainless steel)	To be used with selflocking nut M8

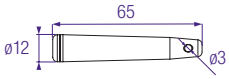

CCS6 - 607	weight = 0,088 kg
Spigot with reduced length	

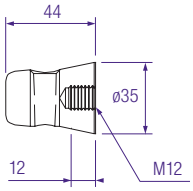

CCS6 - 650	weight = 0,069 kg
Half conical coupler	Offset 0 mm, thread M12

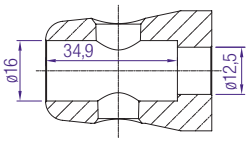

CCS6 - 652S

Male coupler 600 half, hole M12

BM - M12 x 028 - 652. Bolt M12 x 028 bolt for CCS6 - 652

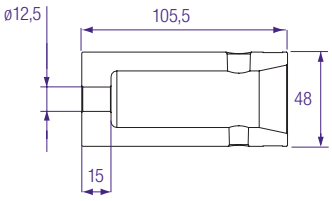

CCS6 - 653	weight = 0,360 kg
Female conical coupler	With 12,5 mm hole for bolts M12

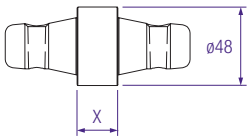

CCS6 - S05 through **CCS6-S50**	weight = 0,187 kg - 0,404 kg
Spacers	X = 2 mm to 50 mm in steps of 5 mm (minimum of 2 mm)

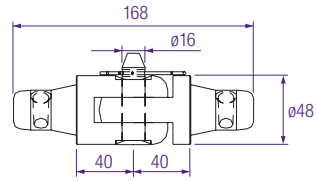

CCS6 - H	weight = 0,590 kg

Hinge for MPT Tower or ST Tower, 4 hinges per tower needed.

See BlackBook "Tecnical Matters" for the use of hinges in different setups.

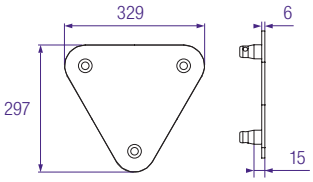

BASE 30D	weight = 1,160 kg

Baseplate for X•H30D truss

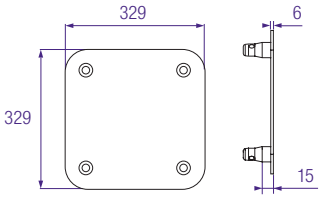

BASE 30V	weight = 1,860 kg

Baseplate for X•H30V truss

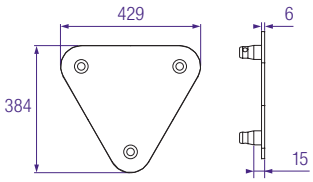

BASE 40D	weight = 2,700 kg

Baseplate for H40D truss

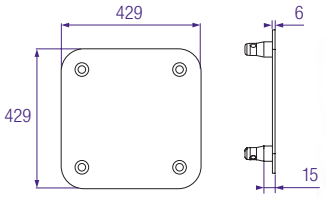

BASE 40V	weight = 2,820 kg

Baseplate for H40V truss

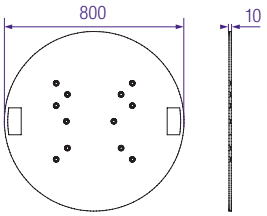

BASE-30-40-RS-BC	weight = 38 kg

Base steel 30-40 series 800x10mm round black coated

BASE-30-40-RS-G Base steel 30-40 series 800x10mm round galvanized

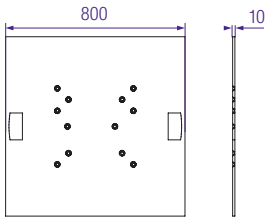

BASE-30-40-SS-BC	weight = 49 kg

Base steel 30-40 series 800x800x10mm black coated

BASE-30-40-SS-G Base steel 30-40 series 800x800x10mm galvanized

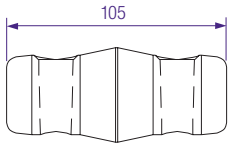

CCS7 - 700	weight = 0,310 kg
Conical coupler	

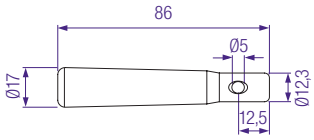

CCS7 - 703 - C52T	weight = 0,110 kg
Spigot (Flush with truss.)	To be used with CT Towers.

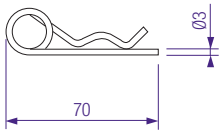

CCS7 - 705	weight = 0,012 kg
Safety R-spring	

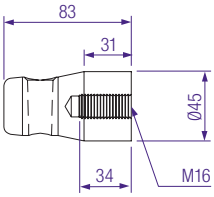

CCS7 - 702/16	weight = 0,260 kg
Ofsett half conical coupler	Ofsett 31 mm, thread M16

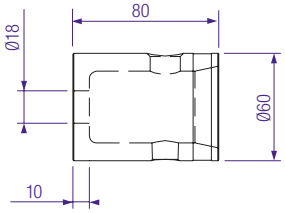

CCS7 - 751	weight = 0,350 kg
Female conical coupler	With 18 mm hole for bolts M16

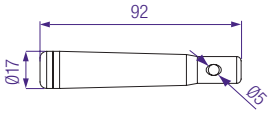

CCS7 - 703	weight = 0,115 kg
Spigot	To be used with CCS7 - 705

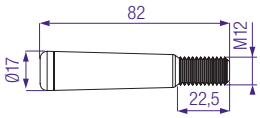

CCS7 - 704	weight = 0,125 kg
Spigot with thread M12 **CCS7 - 704RF** (stainless steel)	To be used with selflocking nut M12

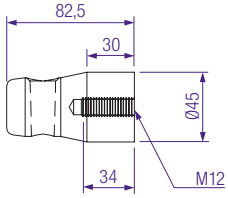

CCS7 - 702/12	weight = 0,265 kg
Ofsett half conical coupler	Ofsett 31 mm, thread M12

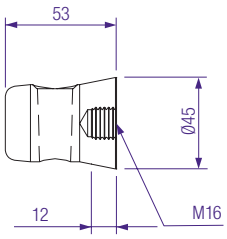

CCS7 - 750	weight = 0,150 kg
Half conical coupler	Ofsett 0 mm, thread M16

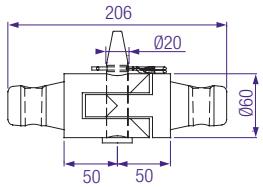

CCS7 - H - O / CCS7 - H - 90	weight = 1,240 kg
Hinge for 36V and 52V truss. See BlackBook "Technical Matters" for the use of hinges in differrent setups.	

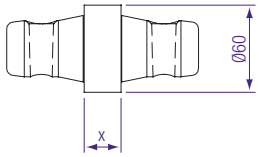

CCS7 - S10 through **CCS7 - S50**	weight = 0,350 kg - 0,360 kg
Spacers	x = 2 mm to 50 mm, in steps of 5 mm (minimum of 2 mm)

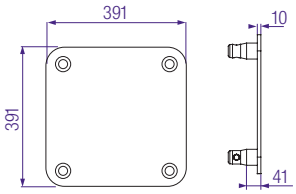

BASE 36V	weight = 1,160 kg
Baseplate for 36V truss	

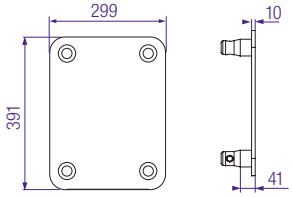

BASE 36R	weight = 1,860 kg
Baseplate for 36R truss	

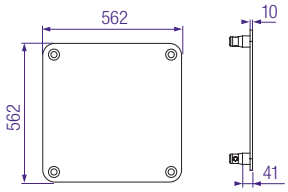

BASE 52V	weight = 2,700 kg
Baseplate for 52V truss	

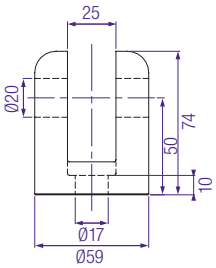

CCS7 - H - FM - BOLT	weight = 0,326 kg

TOOL - HAM - 500 / TOOL - HAM - 750
Copper hammer.

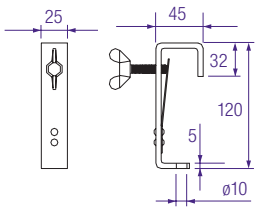

CLP - 425	weight = 0,210 kg
Hook clamp (30-32 mm)	SVWL 15 kg

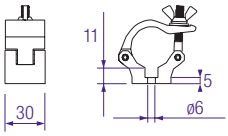

CLP - 435	weight = 0,080 kg
Clamp (30-32 mm)	SVWL 100 kg

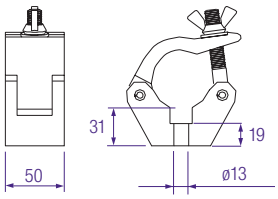

CLP - 535	weight = 0,630 kg
Clamp (48-51 mm) Also available in CLP-535L and CLP-535SL	SVWL 750 kg

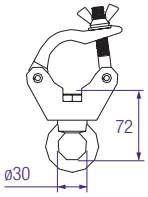

CLP - 537	weight = 0,830 kg
Clamp (48-51 mm) With eye-nut M12	SVWL 340 kg

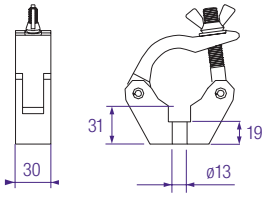

CLP - 545	weight = 0,410 kg
Clamp (48-51 mm)	SVWL 750 kg

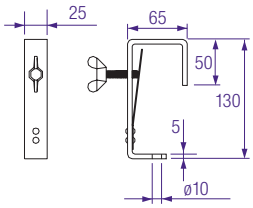

CLP - 525	weight = 0,280 kg
Hook clamp (48-51 mm)	SVWL 40 kg

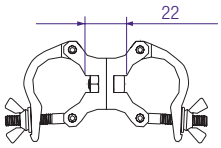

CLP - 436	weight = 0,170 kg
Swivel clamp (30-32 mm)	SVWL 100 kg

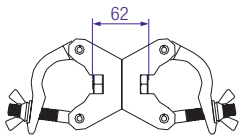

CLP - 536	weight = 1,340 kg
Swivel clamp (48-51 mm)	SVWL 750 kg

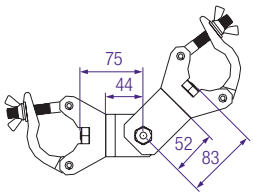

CLP - 541	weight = 1,880 kg
Pivot hinge clamp (48-51 mm)	SVWL N/A

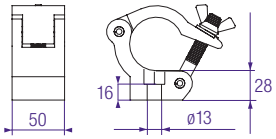

CLP - 587	weight = 0,570 kg
Side entry clamp (48-51 mm)	SVWL 750 kg

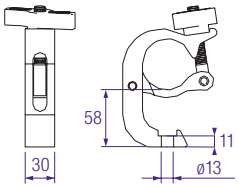

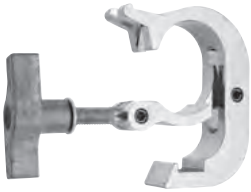

CLP - 589	weight = 0,490 kg
Trigger clamp (48-51 mm)	SVWL 200 kg

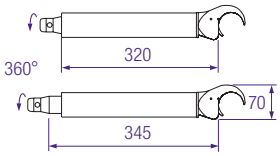

CLP - 528L	weight = 0,980 kg
Quick release claw (51 mm)	Max. allowable load 30 kg
with expendable CCS6	Working length 320-345 mm

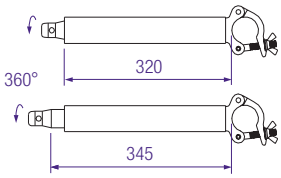

CLP - 529L	weight = 1,210 kg
Clamp (48-51 mm)	Max. allowable load 35 kg
with expendable CCS6	Working length 320-345 mm

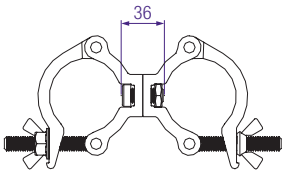

CLP - 636	
Swivel clamp (60 mm)	SVWL 500 kg

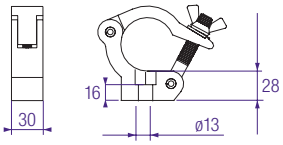

CLP - 588	weight = 0,370 kg
Side entry clamp (48-51 mm)	SVWL 750 kg

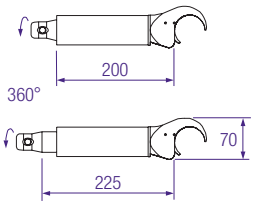

CLP - 528	weight = 0,830 kg
Quick release claw (51 mm)	Max. allowable load 35 kg
with expendable CCS6	Working length 200-225 mm

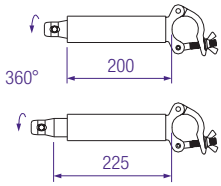

CLP - 529	weight = 1,060 kg
Clamp (48-51 mm)	Max. allowable load 40 kg
with expendable CCS6	Working length 200-225 mm

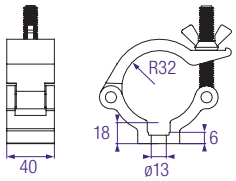

CLP - 635	
Clamp (60 mm)	SWL 500 kg

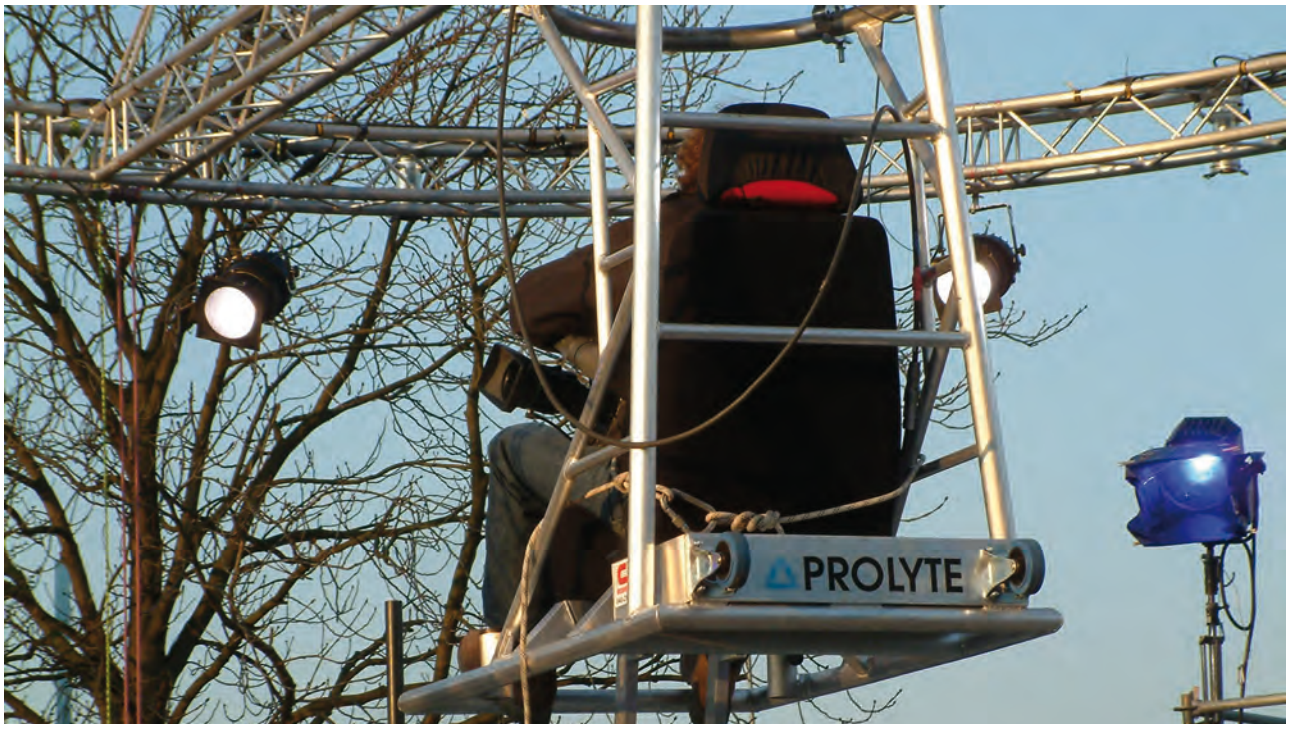

Photo: Rombouts Showequipment BV, The Netherlands. Project: Love Letters.

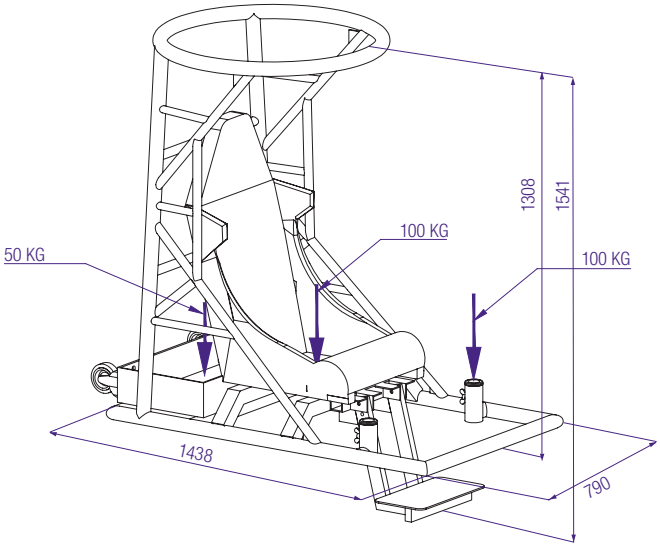

ACC-FSS-1	
Followspot chair	Max. load ballast tray 50 kg Max. load person 100 kg Max. load follow spot 100 kg (only 2011 model)

TRUSS DOLLY

Prolyte Group now presents a new type of dolly to transport 30-series and H40R trusses. The dolly is made of a combination of lightweight plastic and steel, offering a rigid base to transport a stack of trusses. The dolly is used in combination with the standard truss carrier (ACC-515) and has a special compartment to store 5 of these inside the dolly. The dolly is further equipped with handle bars and special stacking rims to stow away your empty dollies efficiently. The trusses can be secured in place by fixing the trusses and truss carriers to the dolly, by means of a ratchet strap (ratchet is included).

The relatively small, but stable and robust dolly, has 4 rotatable wheels with brakes. It offers an excellent transport solution for your truss, especially for smaller event locations or venues with limited access.

TRUSS DOLLY SPECIFICATIONS:

- Measurements: 60 x 45cm
- Height: 18cm
- Capacity: 250kg

ACC-530
Truss dolly

ACC-515
Truss carrier for 30 series truss.

END CAP

The aluminium End Cap will give your truss parts a “finished” and highly aesthetic look. The End Cap is based on the CCS6 system and is available for all X and H Series truss.

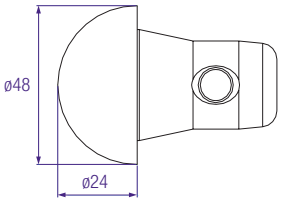

ACC - 512	Weight 0,15 kg

PANEL CLAMPS

ProlyteStructures Panel Clamps are suitable for attaching panels or pictures to the trusses in any desired position. The aluminium clamps are fully adjustable to allow mounting at any desired angle. The clamps are able to hold different materials up to a thickness of 6 to 10 mm.

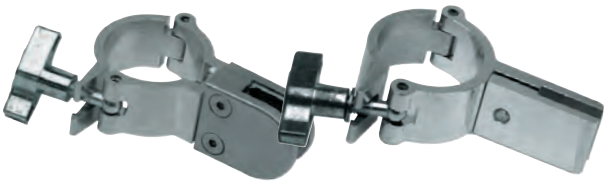

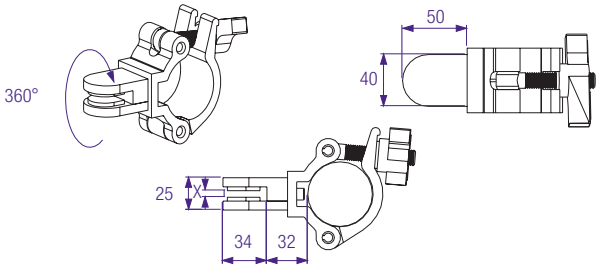

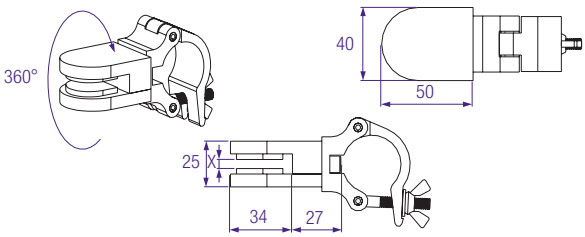

CLP - 535SL - RPC	Weight 0,63 kg
CLP - 535SL - FPC	Weight 0,63 kg

CLP - 435 - RPC	Weight 0,25 kg

System characteristics

ProlyteStructures tower systems consist of four types of rigging towers and the MPT, ST and CT ground support systems. All tower systems are based on standard ProlyteStructures truss. Extending your inventory to encompass more complex systems (like towers or roofs) is a cost-efficient process, proceeding as a step-by-step investment. You only need to buy the additional parts, such as base or top sections. This approach offers extraordinary flexibility and ffacilitates optimum use of your existing trusses.

Rigging towers

The rigging towers are designed as stand-alone towers to support PA clusters or audience lighting. Rigging towers are available in types ranging from 800 to 2300 kg in terms of allowable load, and from 7,60 m to 16 m in terms of lifting height. Rigging towers can be built on any even surface and are specially designed for outdoor use.

Ground support towers

The ground support towers are designed to support a grid without having the need for suspension points. They can be used in a goal post setup (two towers) or as ground support (three or more towers). The ground support towers are available in three types: the MPT Tower (to be used in combination with all trusses from the Multipurpose Series), the ST tower (to be used in combination with all the trusses from the Heavy-Duty Series), and the CT tower (to be used in combination with the B100RV and S100F truss). Ground support towers can be built on any even surface and are designed for indoor as well as outdoor use.

Coupling system

The RT- H30V, MPT and ST mast sections use the CCS6 system. The RT- 36V, RT S52SV, RT- B100RV and CT mast section use the CSS7 system. The Conical Coupling System® allows fast, efficient and reliable coupling of your towers.

Photo: JSA, Russian Federation.

The light-duty RT H30V has a loading capacity of 800 kg and a maximum lifting height of 7,60 m. The RT H30V is based on H30V truss with stabilisers of 60 mm tube. It has a self-weight of 260 kg. The legs of the V-shaped base can be levelled by means of screw jacks, which are attached to the side of the legs.
After the base is placed, the mast can be built and erected using the hinges on the base corner. The mast should be stabilised by means of the braces, which fix to the legs. After the system is levelled and ballast is applied, the load can be hoisted in position. Its relatively small dimensions make it suitable for a range of applications, including outdoor events, concerts, shopping malls, halls, exhibition areas and theme parks.

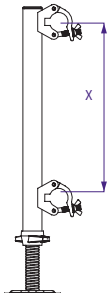

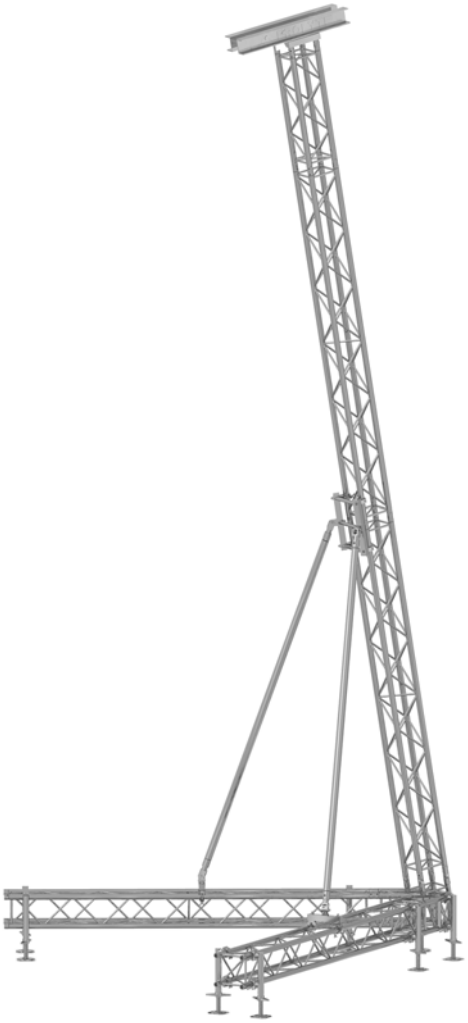

ACC - SPIN - ATT - 30
Spindle attachment 30 truss, x = 239 mm.

ACC - SPIN - LAY/40
Spindle to be ordered separately.

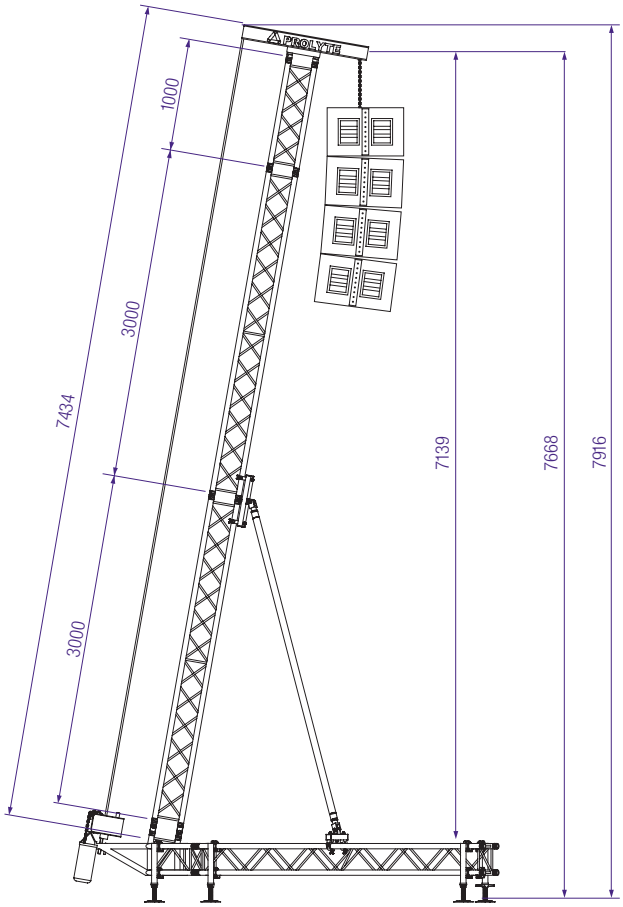

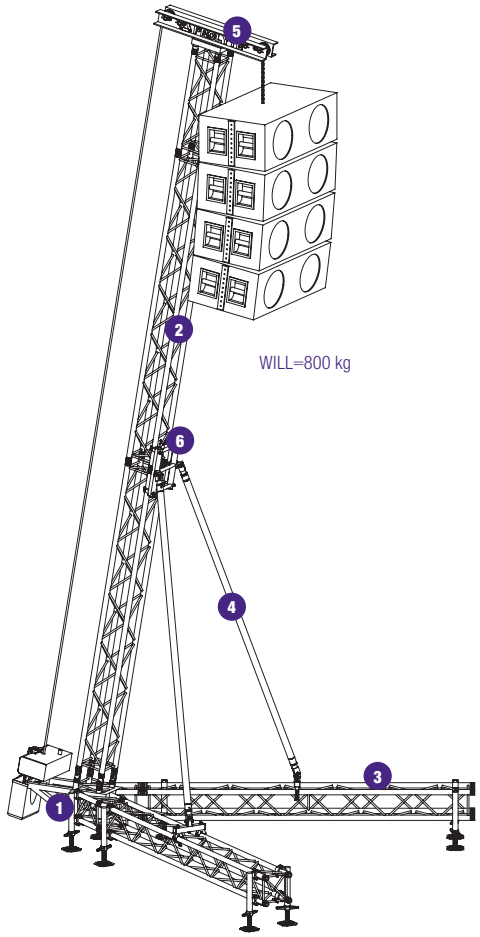

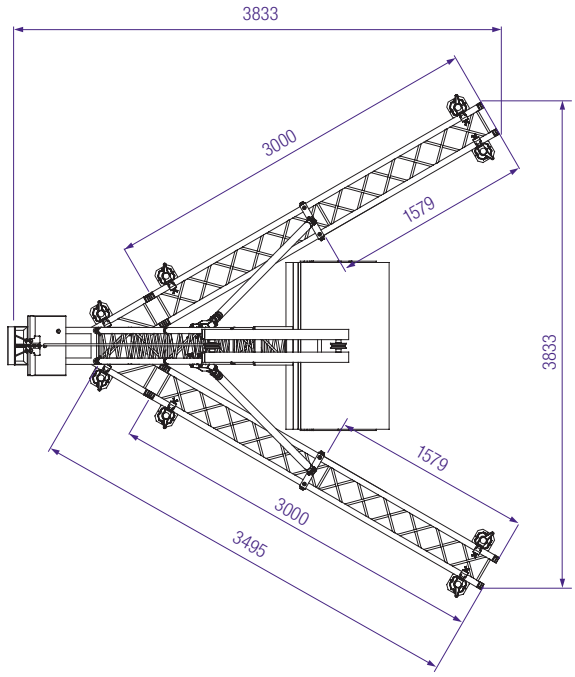

Legend		
1	CORNER	RT - H30V - C003
2	MAST SECTION	H30V - L•••
3	LEG SECTION	H30V - L•••
4	STABILISER SECTION	TUBE 60 MM
5	TOP SECTION	RT - 009H
6	MAST ATTACHMENT	RT - STAB - H30V - TOP

Technical specifications - RT - H30V - 0,8T	
max. overall height	7,92 m (other heights optional)
max. lifting height	7,60 m
max. loading capacity	800 kg (1760 lbs)
max. surface load front	2,5 m^2
max. surface load side	1,25 m^2
truss sections	H30V
stabiliser	60 mm
coupling system	CCS6 series
alloy alu parts	EN - AW 6082 T6
ballast	100 kg
max. windspeed	20,7 m/s (46.3 mph)
system weight	260 kg
Structural specifications available.	

Photo: Prolyte Group, The Netherlands.

The medium-duty RT S36V has a loading capacity of 1000 kg and a maximum lifting height of 9,25 m. The RT S36V is based on S36V truss with stabilisers of 60 mm tube. It has a self-weight of 415 kg. The legs of the V-shaped base can be levelled by means of screw jacks, which are attached to the side of the legs. After the base is placed, the mast can be built and erected using the hinges on the base corner. The mast should be stabilised by means of the braces, which fix to the legs. After the system is levelled and ballast is applied, the load can be hoisted in position. The relatively compact dimensions make it suitable for a range of applications, including outdoor events, concerts, shopping malls,halls, exhibition areas and theme parks.

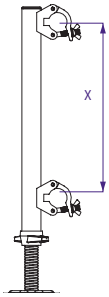

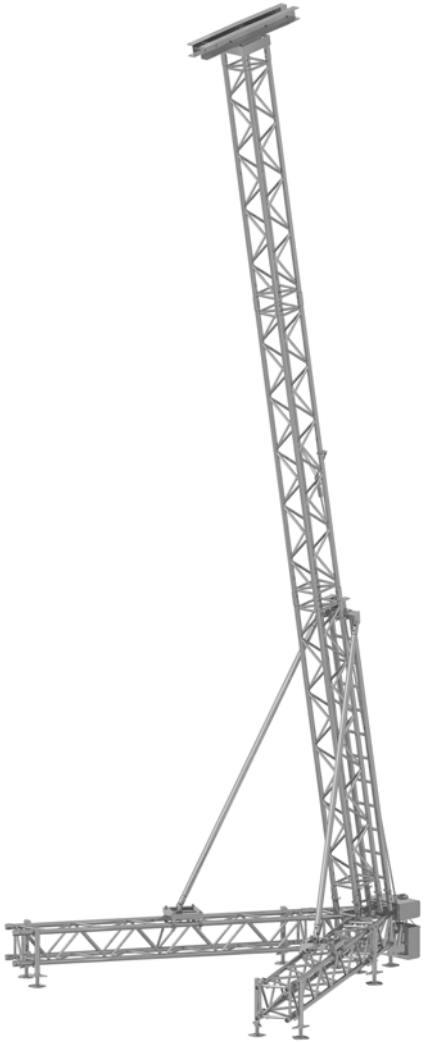

ACC - SPIN - ATT - 36
Spindle attachment 36 truss, x = 299 mm.

ACC - SPIN - LAY/40
Spindle to be ordered separately.

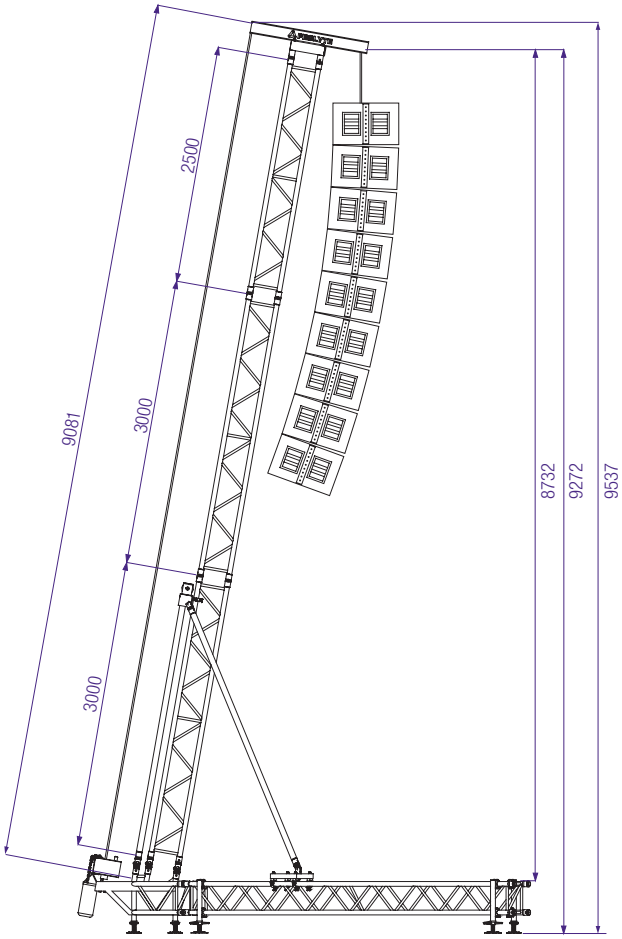

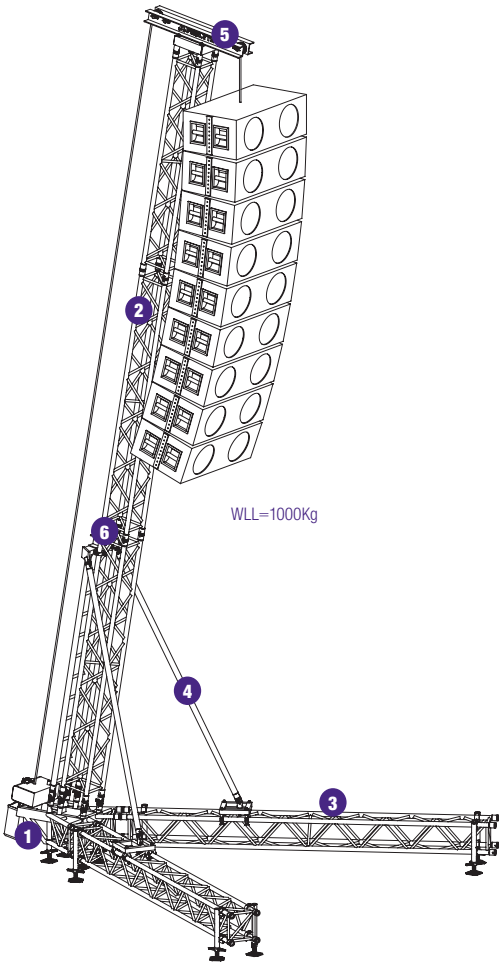

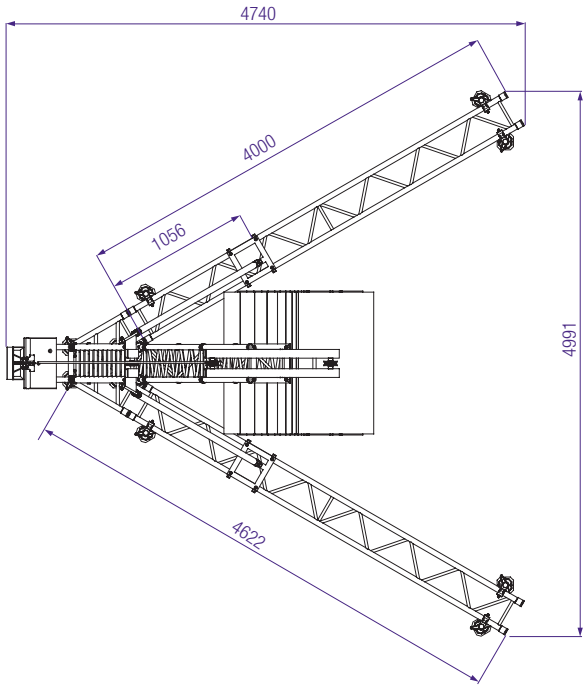

Legend		
1	CORNER	RT - S36V - C003
2	MAST SECTION	36V - L300
3	LEG SECTION	S36V - L400
4	STABILISER SECTION	TUBE 60 MM
5	TOP SECTION	RT 009 - S36V
6	MAST ATTACHMENT	RT - STAB - S36V - REAR

Technical specifications - RT - S36V - 1T	
max. overall height	9.46 m (other heights optional)
max. lifting height	9.25 m
max. loading capacity	1000 kg (2200 lbs)
max. surface load front	5 m^2
max. surface load side	2,5 m^2
truss sections	S36V
stabiliser	60 mm
coupling system	CCS7 series
alloy alu parts	EN - AW 6082 T6
ballast	480 kg
max. windspeed	20,7 m/s (46.3 mph)
system weight	415 kg
Structural specifications available	

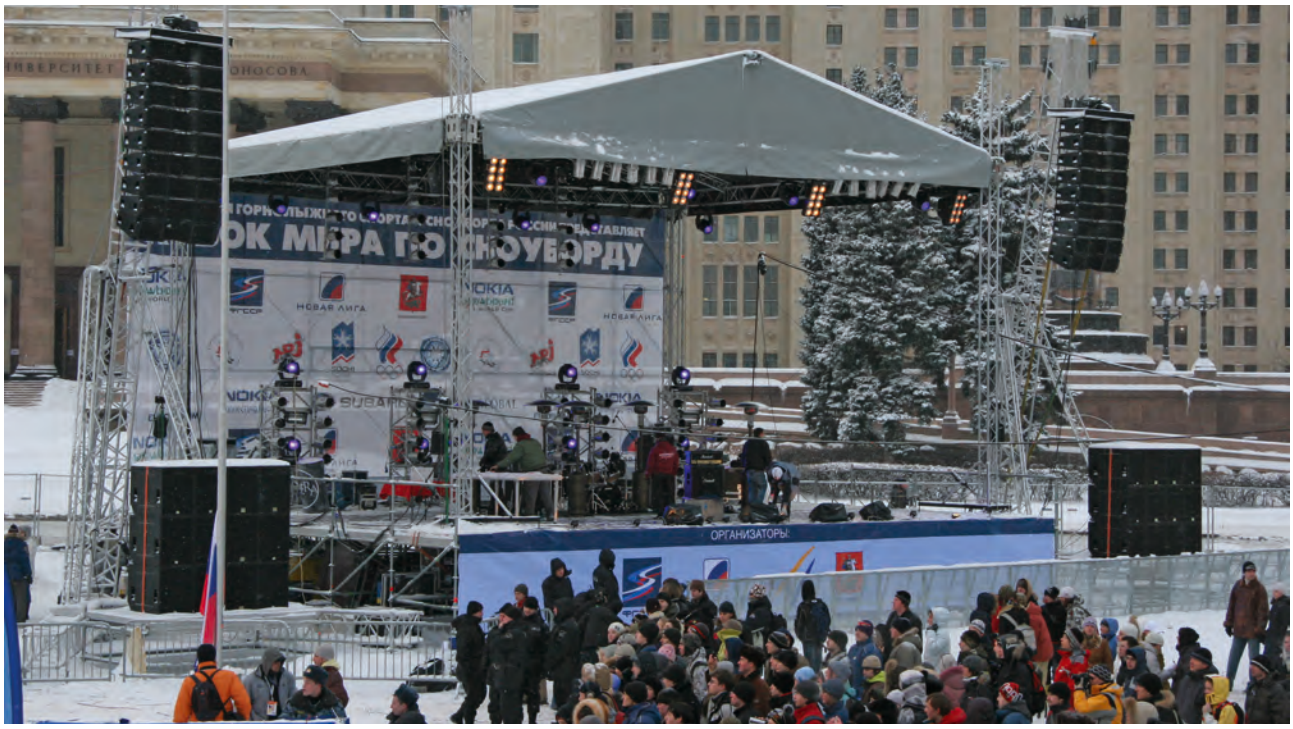

Photo: ModifiC, Russian Federation. Project: RT Sound -Nokia Snowboard.

The medium-to-heavy-duty RT-S52SV has a loading capacity of 1400 to 2900 kg and a maximum lifting height of 12,95 m (please refer to the technical specifications table for further details). The RT-S52SV is based on S52SV truss with stabilisers of H30D truss. It has a self-weight of 520 kg. The legs of the V-shaped base can be levelled by means of screw jacks, which are attached to the side of the legs. After the base is placed, the mast can be built and erected using the hinges on the base corner. The mast should be stabilised by means of the braces, which fix to the legs. After the system is levelled and ballast is applied, the load can be hoisted into position.
The RT-S52SV rigging tower is the ideal solution for medium to large scale events where flexibility counts, including festivals, concerts, or other major public events. The RT-S52SV can be converted from one type to another by simply adjusting the length of the mast.

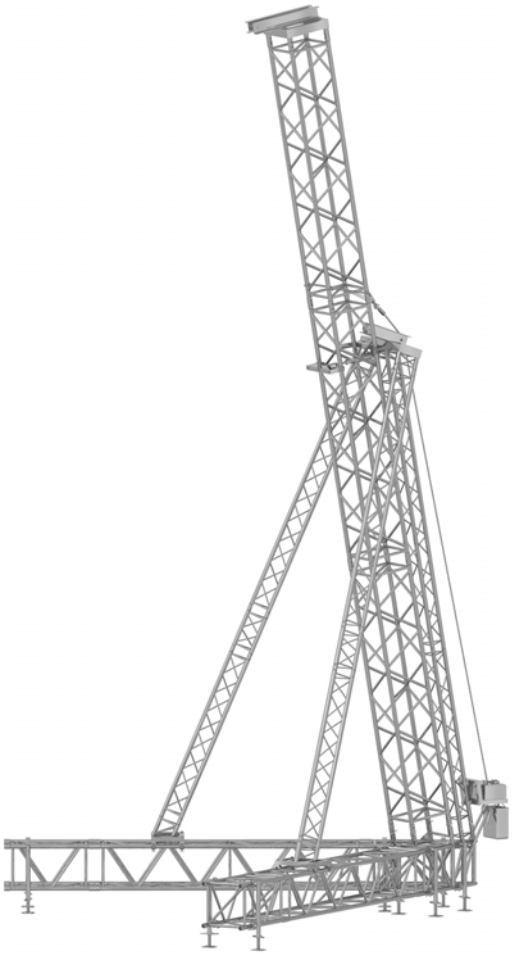

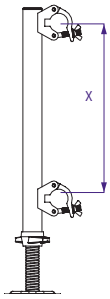

ACC - SPIN - ATT - 52
Spindle attachment 52 truss, x = 470 mm.

ACC - SPIN - LAY/60
Spindle to be ordered separately.

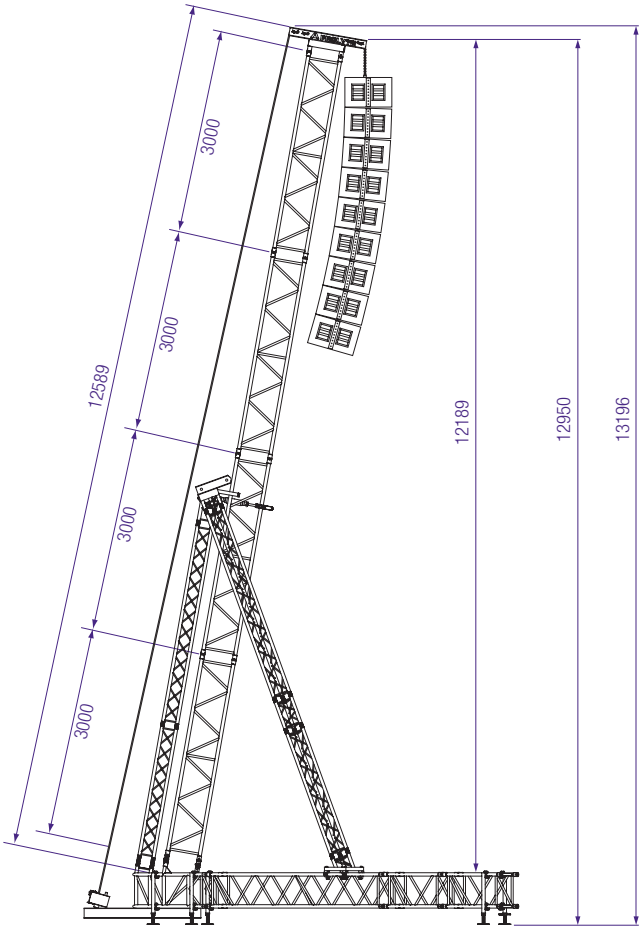

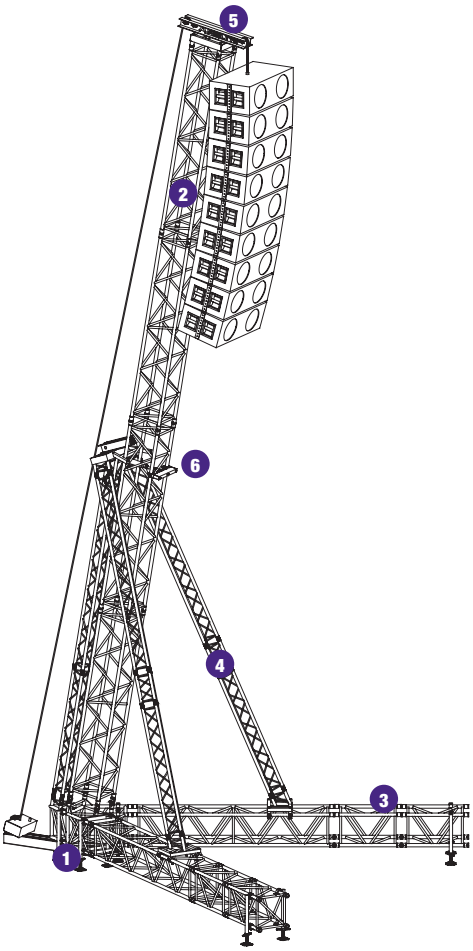

Legend		
1	CORNER	RT - S52SV - C003
2	MAST SECTION	S52SV - L300
3	LEG SECTION	S52SV - L300
4	STABILISER SECTION	H30D - L•••
5	TOP SECTION	RT - 009S
6	MAST ATTACHMENT	RT - TOP

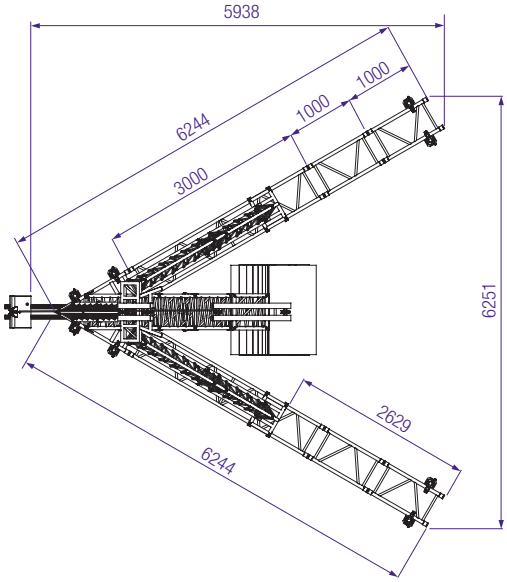

Technical specifications - RT - S52SV - 1,4T / RT - S52SV - 2,0T / RT - S52SV - 2,9T			
	RT - S52SV - 1,4T	**RT - S52SV - 2,0T**	**RT - S52SV - 2,9T**
max. overall height	13,15 m	11,18 m	10,19 m
max. lifting height	12,95 m	10,95 m	9,95 m
max. loading capacity	1400 kg (3080 lbs)	2050 kg (4510 lbs)	2900 kg (6380 lbs)
max. surface front load	5 m^2	7,5 m^2	10 m^2
max. surface side load	2,5 m^2	3,75 m^2	5 m^2
truss sections	S52SV	S52SV	S52SV
stabiliser	H30D	H30D	H30D
coupling system	CCS7 series	CCS7 series	CCS7 series
alloy alu parts	EN - AW 6082 T6	EN - AW 6082 T6	EN - AW 6082 T6
ballast	150 kg	200 kg	200 kg
max. windspeed	20,7 m/s (46.3 mph)	20,7 m/s (46.3 mph)	20,7 m/s (46.3 mph)
system weight	520 kg (1144 lbs)	495 kg (1089 lbs)	463 kg (1018 lbs)

Photo: Italstage, Italy.

The heavy-duty RT-B100RV has a loading capacity of 2300 kg and a maximum lifting height of 15,95 m. The RT-B100RV is based on B100RV truss with stabilisers of H30D truss. It has a self-weight of 695 kg. The legs of the V-shaped base can be levelled by means of screw jacks, which are attached to the side of the legs. After the base is placed, the mast can be built and erected using the hinges on the base. The mast should be stabilised by means of the braces, which fix to the legs. After the system is levelled and ballast is applied, the load can be hoisted in position.
The sturdy and stable RT-B100RV rigging tower is a safe and suitable solution for all sorts of settings, like outdoor events, major public gatherings, and large stadiums.

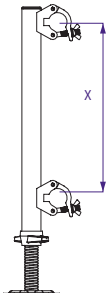

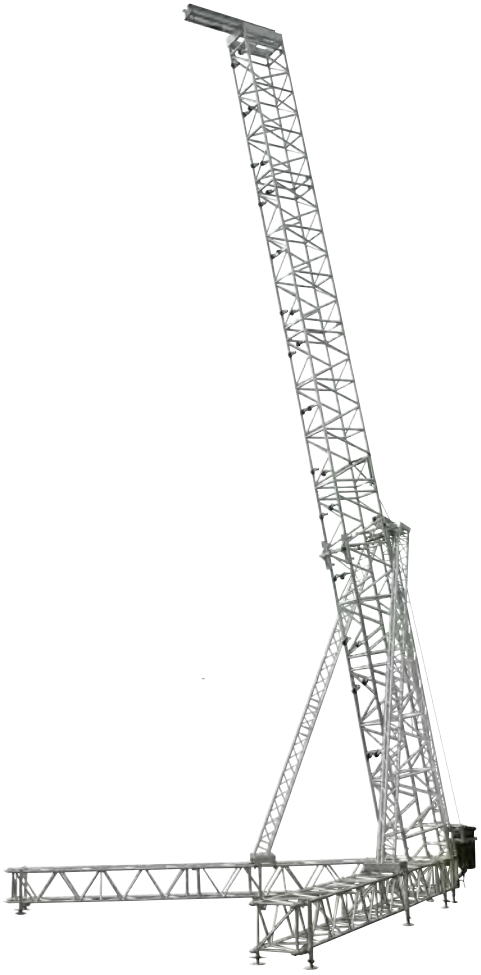

ACC - SPIN - ATT - 52
Spindle attachment 52 truss, x = 470 mm.

ACC - SPIN - LAY/60
Spindle to be ordered separately.

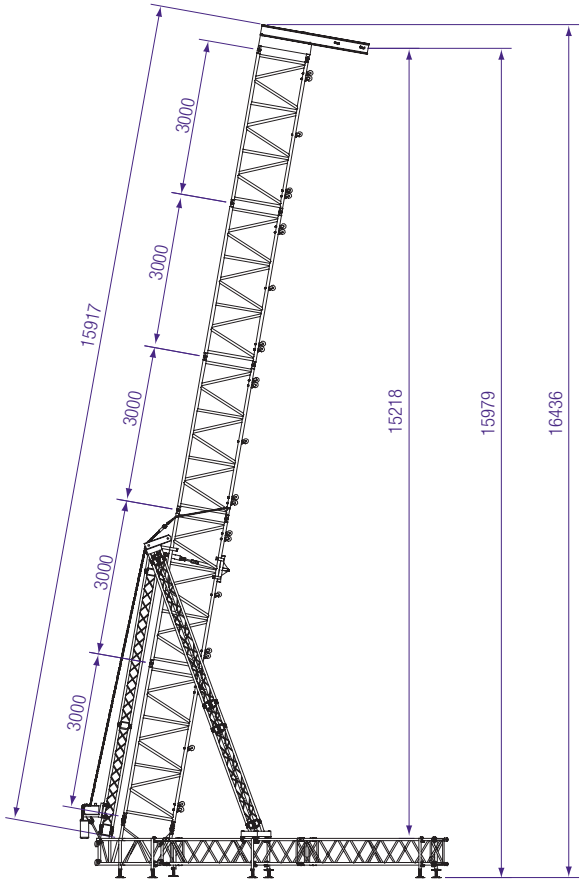

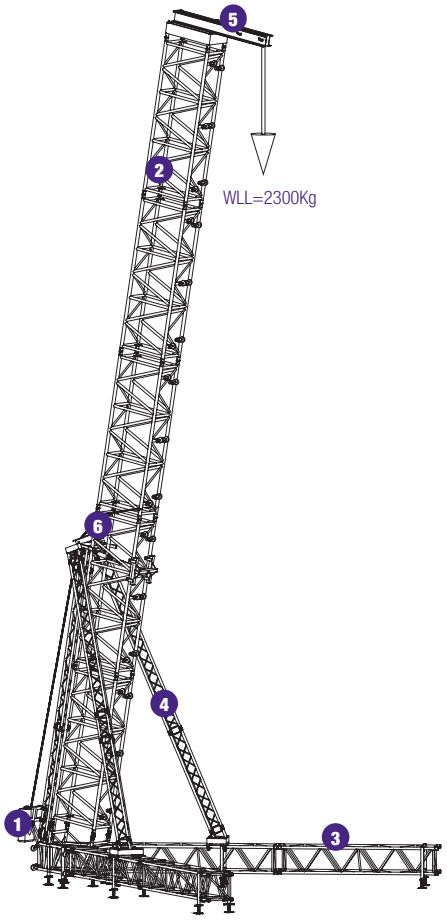

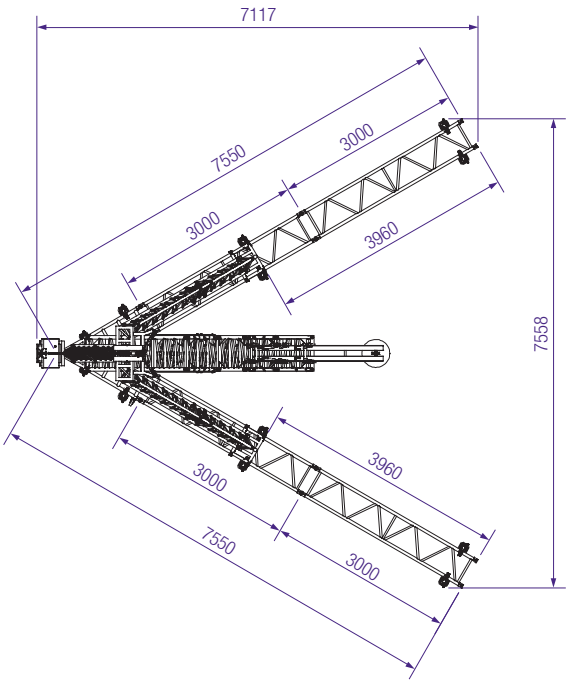

Legend		
1	CORNER	RT - B100RV - C003
2	MAST SECTION	B100RV - L300
3	LEG SECTION	S52SV - L•••
4	STABILISER SECTION	H30D - L•••
5	TOP SECTION	RT - 009 - B100RV
6	MAST ATTACHMENT	RT - TOP

Technical specifications - RT - B100RV - 2,3T	
max. overall height	16,22 m
max. lifting height	15,95 m
max. loading capacity	2300 kg (5060 lbs)
max. surface load front	11 m^2
max. surface load side	5,5 m^2
truss sections	B100RV / S52SV
stabiliser	H30D
coupling system	CCS7 series / CCS6 series
alloy alu parts	EN - AW 6082 T6
ballast	915 kg
max. windspeed	20,7 m/s (46.3 mph)
system weight	695 kg (1530 lbs)

Photo: JSA, Russian Federation.

The MPT tower is based on H30V truss and employs a sleeve block that fits to any of the 30 or 40 Series trusses on all four sides by means of bolted CCS6 couplers (either male or female). In combination with an adapter plate, it is also possible to use the sleeve block with either S36R or S36V truss. The MPT tower has a self-weight of 115 kg.
The MPT sleeve block is a fully bolted structural element, making it much stronger and more precise than conventional welded versions. The top section and base section can facilitate the use of either a hand winch or a chain hoist.
The MPT tower is a cost-effective investment. You need only purchase the special parts if you wish to expand your truss system with towers.

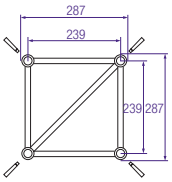

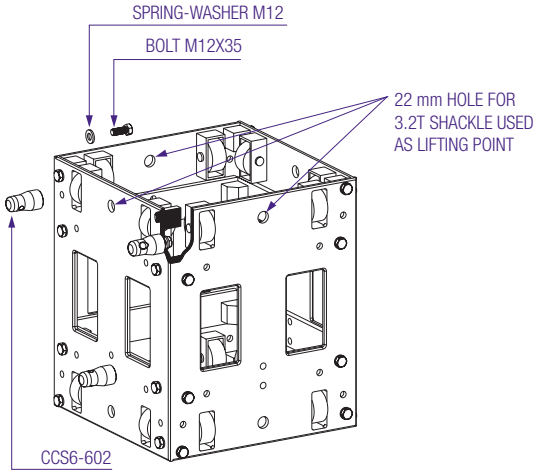

MPT - 010

Sleeve block.

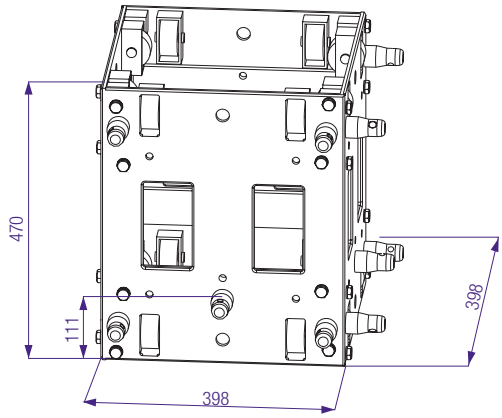

MPT - 010

Sleeve block.

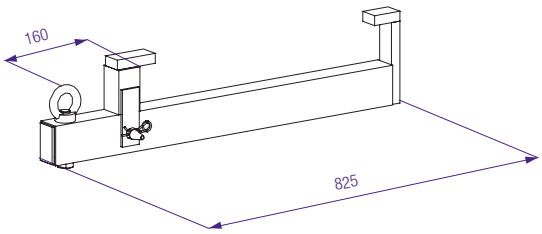

MPT - 041

MPT Motor attachment. WLL 1000 kg.

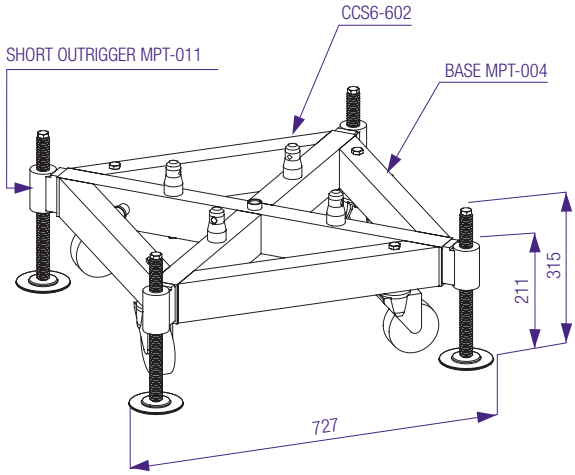

MPT - 004

Base with MPT - 011 short outriggers.

MPT - 010 Sleeve Block - Allowable cantilever load

Length (L)	H40V X40V PL (kg)	H40D X40D PL (kg)	H30V X30V PL (kg)	H30D X30D PL (kg)
0,5	400	160	400	130
1	200	80	200	65
1,5	130	50	130	40
2	100	40	100	30

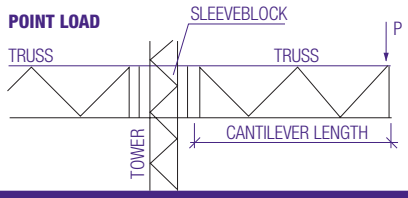

Technical specifications - MPT Tower

max. height	8.00 m
max. loading capacity	1000 kg*
max. load handwinch	750 kg (750M Tower)
type mast sections	H30V
sleeve block suitable for truss-series	x or H30D, x or H30V, x or H40D and x or H40V, S36R, S36V
alloy alu parts	EN-AW 6082 T6
coupling system tower	CCS6 series
self weight	115 kg

*** There is a structural relation between tower height and size, further the applied load and the method of restraining the tower base and top also have its influence on the total loading capacity. All these factors must be taken into consideration when determining the allowable load.**

More information can be found in the Prolyte BlackBook.

MPT - 009

Top section. Pulley suitable for 6,7 and 8 mm chain.

MPT Safe

Code	Pieces	Description
MPR-009	2	MPT SLEEVE/ATTACH HIJSOOG
RI-SH3.2T	2	SHACKLE 3 2T WITH BOLT/NUT/PIN
CH-07-150CHH	2	CH 1.5T,L=150,CLUTCH,HOOK
BM-M12X400	1	THRDROD M12X400
BM-M12-N	4	NUT M12 DIN934
BM-M12-SW	4	WSHR M12 SPRNG DIN127B

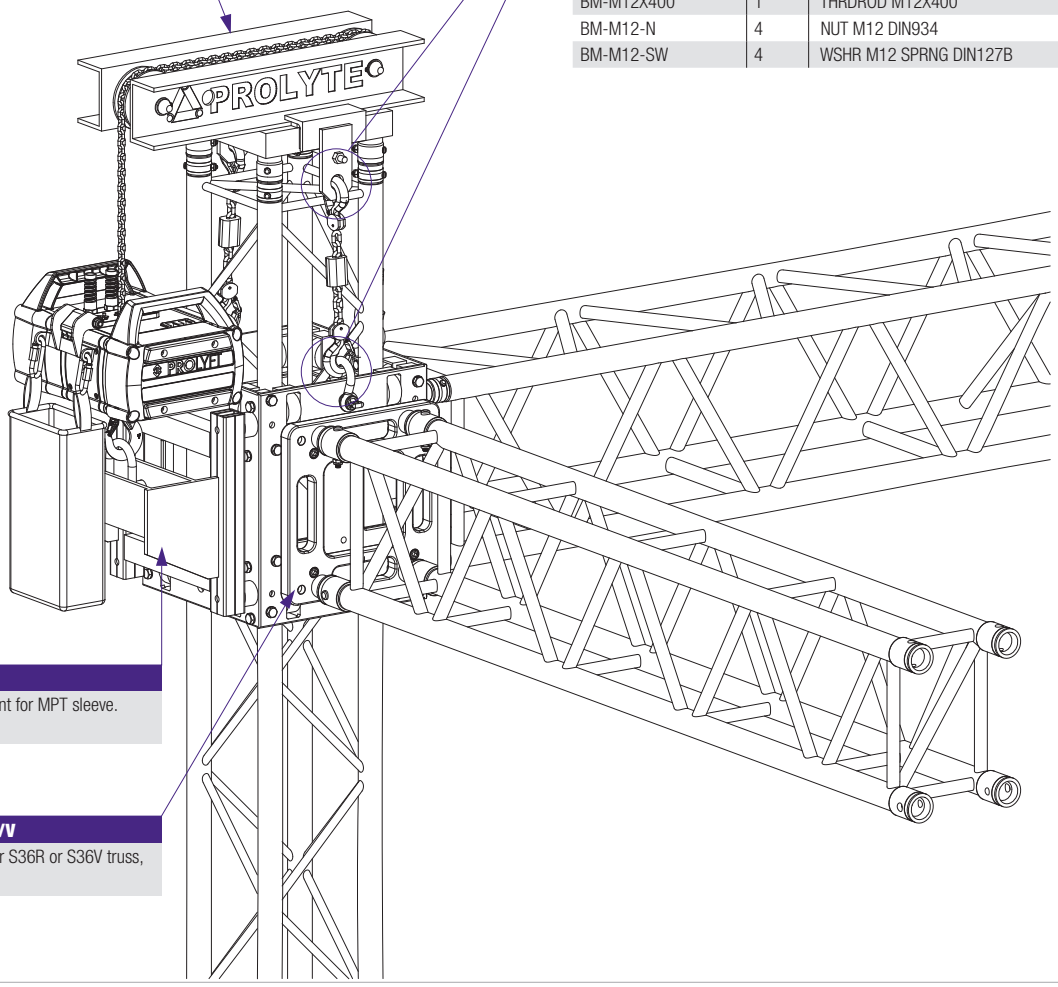

MPT - 042

Motor attachment for MPT sleeve. WLL 1000 kg.

ACC - A - 36R/V

Adapter plate for S36R or S36V truss, WLL 1000 kg.

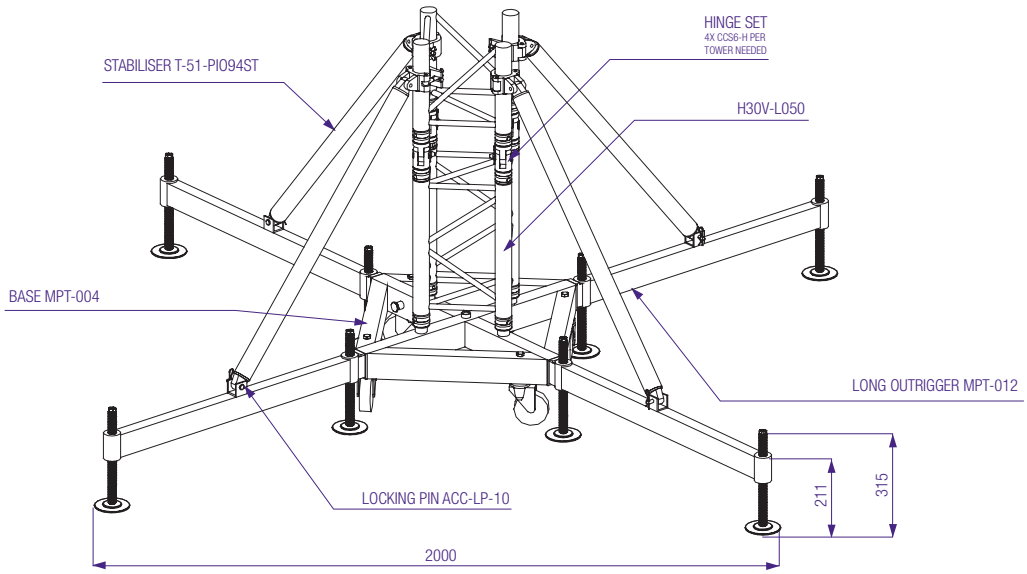

MPT - 004

Base with MPT - 012 long outriggers.

1 The black coated, steel base (MPT-004) is equipped with 4 castors and four half conical couplers (CCS6-602) for the attachment of the mast section. The base can be used with either short outriggers (MPT-011) or long outriggers (MPT-012), depending on the tower configuration.

2 To secure the outriggers within the base, a trigger pin is placed on the inside of the base frame. Pull the pin outwards when mounting the outriggers.

3 Disassemble the hinge set, mount the half hinges to both the mast sections (H30V truss). Male and female connections should be mounted diagonally (as shown in the picture) in order to facilitate the erection of the mast.

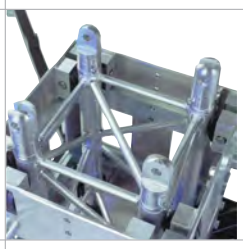

4 A completely mounted hinge set. First locate the hinge pins on one side. The truss now works as a hinge and can be erected easily. Subsequently locate the remaining hinge pins in the other side to fix the mast into position. Per tower 4 x CCS6-H needed. (hinge set MPT•ST tower).

5 Unscrew the screw jacks in the outriggers. Make sure that the castors of the base are free of any load. The complete load of the base should be supported by the screw jacks. Level the base by adjusting the screw jacks. The base must be perfectly level before the mast is erected. Long outriggers are needed for structures with three towers or less. Make sure the screw jacks can absorb tower forces trough filler plates where needed.

6 To use the MPT tower in combination with a chain hoist, ProlyteStructures provides the motor attachment (MPT-041). This supplementary component can be attached to the base and has a fixing point for the chain hoist hook.

7 The sleeve block is lifted by use of a chain hoist or a hand winch. Chain hoists can be mounted with the help of the motor attachment (MPT-042).

8 ProlyteStructures recommends that, during storage and transportation, the MPT towers be mounted as an assembly of the following components: base section, 50 cm mast section, sleeve block, hinges and top section. This combination ffacilitates fast, efficient loading and building of the towers (size 60 × 60 x 115 cm, weight +/- 115 kg).

H40R TO MPT SLEEVE BLOCK ADAPTER

The H40R truss is a rectangular standard H40 truss with a very clever program of specifications. The H40R measures 387 mm high by 287 mm wide. For the H40R Prolyte Group has developed a special adapter to be able to mount this flexible truss type on the MPT tower system, thereby offering more application possibilities.

The H40R is available in all standard lengths as well as a box-corner. Apart from the standard lengths and box corner for the H40R range, Prolyte Group offers a box corner attachment and the H40R MPT adapter; completing the H40R range to a convenient and flexible range.

Depending on the coupling method, the following bolts are required to attach the adapter:

- To attach the H40R-MPT010-ADAP to the sleeve block: BM-M12X075 + BM-M12-N + BM-M12-SW
- To attach the CCS6-651: BM-M12X050-IB + BM-M12-SN + BM M12-SW
- To attach the CCS6-602: BM-M12X040 + BM-M12-SW

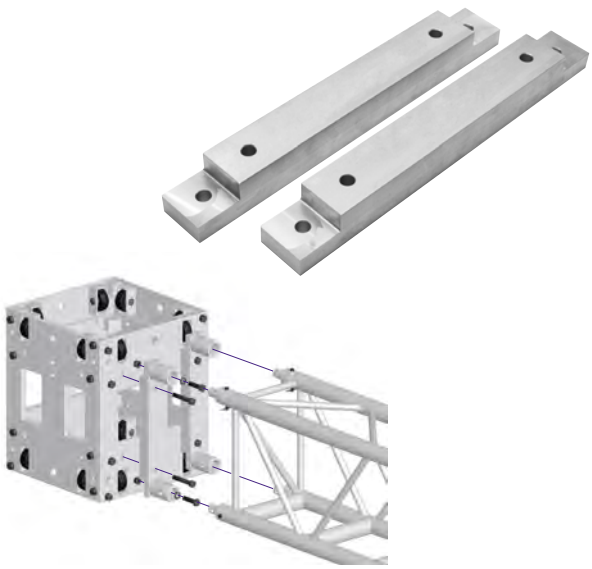

MPT BALLAST FRAME

The ballast frame MPT-005 is designed to offer a safe, engineered and easy solution for your ballast requirements. These aluminium frames are simply mounted between the long outriggers of your ST- or MPT base section. Layher screw spindles are placed at the outside for optimum levelling each ballast frame. The system doesn't require any tooling. Standard, pallet-sized water tanks fit on the resulting platforms to create your ballast weight.

HOW TO USE THE BALLAST FRAME

The ballast frames should be used only in conjunction with long outriggers and stabiliser braces. All ballast frames and ballast should be positioned symmetrically. For any other needed set-ups, please contact our engineering department. The amount of ballast required for a structure is dependent on the outcome of structural analysis. Due to deflection of components not all applied ballast can be activated. The outsides will stay grounded, while the area around the tower will have the tendency to tip or be lifted (see drawing example).

MPT-005 SPECIFICATIONS	
Weight	MPT-005: 17,8 kg/frame
Article Code:	MPT-005 MPT ballast frame 1000kg
Additional items required:	2 x ACC-SPIN-LAY/60-60 SCREWJACK per frame are needed.

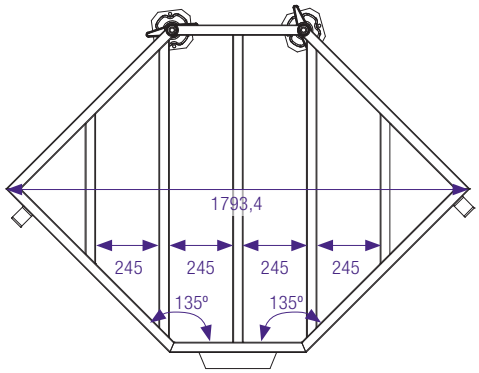

Photo: Enttech, Greece. Project: Voala Beach, Athens.

The ST tower is based on S40T mast sections. These mast sections have one-sided horizontal bracing to facilitate safe and easy climbing of the towers, with the use of an appropriate fall protection system. The ST tower uses several sleeve blocks that combine all
the trusses from the S and B Series. This makes it possible to fit any of the S Series trusses to all four sides by means of bolted female CCS7 couplers. The ST tower has a self-weight of 120 kg.
The ST sleeve block is a fully bolted structural element, making it much stronger and more precise than conventional welded versions.
The ST tower is a cost-effective investment. You need only purchase the special parts if you wish to expand your truss system with towers.
There is a structural relation between tower length and size. Additionally, the applied load and the method of restraining the tower base also contribute to determination of the total loading capacity. All these factors must be taken into consideration when determining the allowable load and tower length.

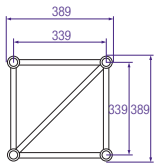

S40T - Series standard available lengths									
Meters	0,5	1,00	1,50	2,00	2,50	3,00	3,50	4,00	Avarage weight per meter = 10,3 kg
Feet	1.64	3.28	4.92	6.56	8.20	9.84	11.48	13.12	Avarage weight in pounds per feet = 6,93 LBS

S40T - Allowable loading

						MAXIMUM ALLOWABLE POINT LOADS										
		Uniformly Distributed Load				Centre Point Load				Single Load Third Points Load per Point		Single Load Fourth Points Load per Point		Single Load Fifth Points Load per Point		
SPAN		UDL		DEFLECTION		CPL		DEFLECTION		TPL		QPL		FPL		SPAN
m	ft	kg/m	lbs/ft	mm	inch	kgs	lbs	mm	inch	kgs	lbs	kgs	lbs	kgs	lbs	total weight
3	9,8	1532,2	1031,0	6	0,2	2857,8	6307,2	5	0,2	1835,6	4051,1	1473,6	3252,2	1149,2	2536,2	36
4	13,1	1146,5	771,4	10	0,4	2344,0	5173,2	8	0,3	1534,8	3387,4	1202,8	2654,7	1002,4	2212,2	48
5	16,4	765,9	515,4	16	0,6	1914,8	4226,0	13	0,5	1324,1	2922,2	957,4	2113,0	797,8	1760,8	60
6	19,7	528,6	355,7	23	0,9	1585,8	3499,8	18	0,7	1162,0	2564,5	792,9	1749,9	660,7	1458,3	72
7	23,0	385,5	259,4	31	1,2	1349,2	2977,7	25	1,0	1011,9	2233,3	674,6	1488,9	562,2	1240,7	84
8	26,2	292,6	196,9	41	1,6	1170,4	2583,2	32	1,3	877,8	1937,4	585,2	1291,6	487,7	1076,3	96
9	29,5	228,9	154,0	51	2,0	1030,2	2273,6	41	1,6	772,6	1705,2	515,1	1136,8	429,2	947,3	108
10	32,8	183,4	123,4	63	2,5	916,9	2023,6	51	2,0	687,7	1517,7	458,5	1011,8	382,0	843,2	120
11	36,1	149,7	100,7	77	3,0	823,2	1816,9	61	2,4	617,4	1362,7	411,6	908,4	343,0	757,0	132
12	39,4	124,0	83,5	91	3,6	744,3	1642,6	73	2,9	558,2	1232,0	372,1	821,3	310,1	684,4	144
13	42,6	104,1	70,0	107	4,2	676,7	1493,4	86	3,4	507,5	1120,0	338,3	746,7	281,9	622,2	156
14	45,9	88,3	59,4	124	4,9	617,9	1363,7	99	3,9	463,4	1022,8	309,0	681,9	257,5	568,2	168
15	49,2	75,5	50,8	143	5,6	566,3	1249,8	114	4,5	424,7	937,3	283,1	624,9	235,9	520,7	180
16	52,5	65,1	43,8	162	6,4	520,4	1148,6	130	5,1	390,3	861,4	260,2	574,3	216,8	478,6	192

1 inch = 25,4 mm | 1m = 3.28 ft | 1 lbs = 0,453 kg

- Tüv certification only valid for loading table above.
- Loading figures are only valid for static loads.
- Loading figures are only valid for single spans with supports at both ends.
- All static systems, other than single spans, need an individual structural calculation. Please contact a structural engineer or Prolyte Group for assistance.
- Loading figures are calculated according to and in full compliance with European standards (Eurocode).
- The self-weight of the trusses is already taken into account.
- Loading figures are only valid for the cross sectional orientation of the truss as shown by the icon in the loading table.
- The interaction between bending moment and shear force at the connection point is already taken into account.
- Truss spans can be assembled from different truss lengths.
- Read the manual before assembling, using and loading the truss.

Technical Specifications - S40T	
Types	tower truss
Alloy	EN AW 6082 T6
Main Tubes (Chords)	50x4
Braces	25x3
Coupling System	CCS6

Structural data can be found at www.prolyte.com

Technical specifications - ST Tower	
max. height	depends on structure and tower lenght
max. loading capacity*	2000 kg**
type mast sections	S40T
sleeve block suitable for truss-series	S36R•V, S52F•V, S66R•V, S100F and B100RV (with various sleeve blocks)
alloy alu parts	EN - AW 6082 T6
main tubes mast sections	50 x 4mm
braces mast sections	25 x 3mm
coupling system tower	CCS6 - Serie
self weight	120kg

*** To be used with chainhoist only.**

**** There is a structural relation between tower height and size, further the applied load and the method of restraining the tower base and top also have its influence on the total loading capacity. All these factors must be taken into consideration when determining the allowable load.**

More information can be found in the Prolyte BlackBook.

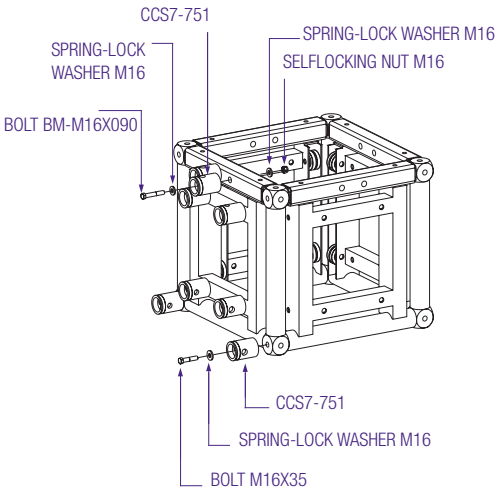

ST - 010

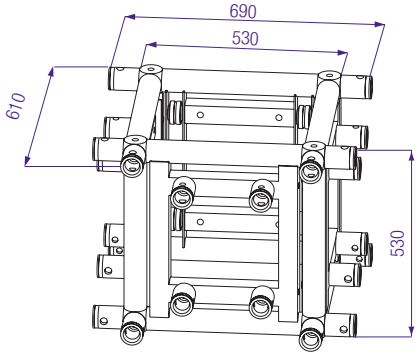

ST - 010 - 4 - 52V/36R

Sleeve block for S36R and S52V

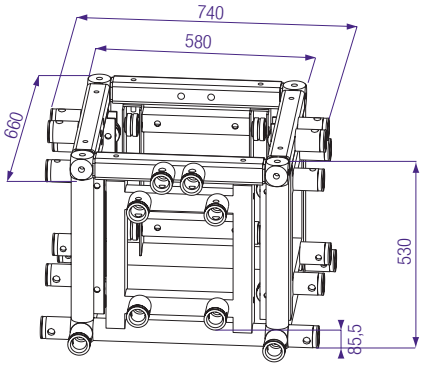

ST - 010 - 4 - 52F/36R

Sleeve block for S36R and S52F

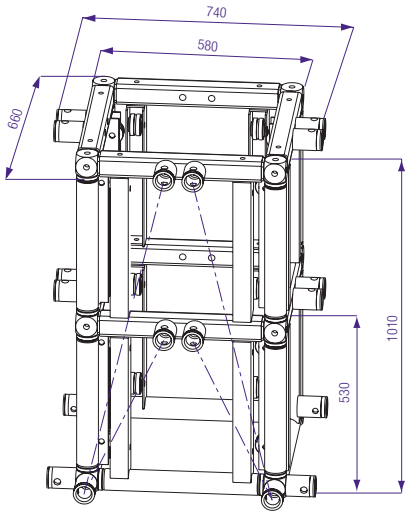

ST - 010 - 4 - 100F/52F

Sleeve block for S52F / S100F / B100RV.

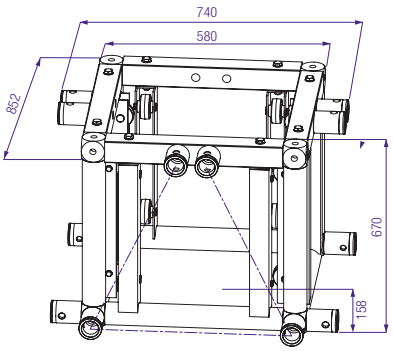

ST - 010 - 4 - 52F

Sleeve block for 52F.

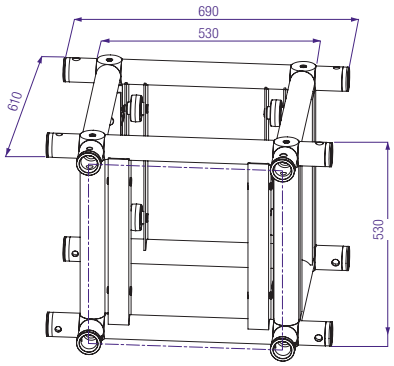

ST - 010 - 4 - 52V

Sleeve block for 52V.

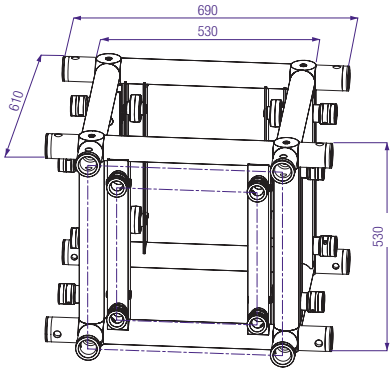

ST - 010 - 4 - 52V / 40V

Sleeve block for S52V-40.

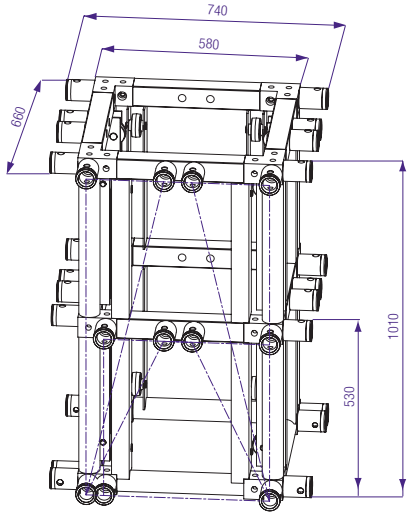

ST - 010 - 4 - 100 - 52

Sleeve block for 100RV / S100F / S52F / S52V.

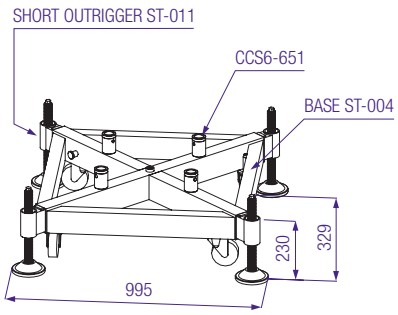

ST-004

Base with ST-011 short outriggers

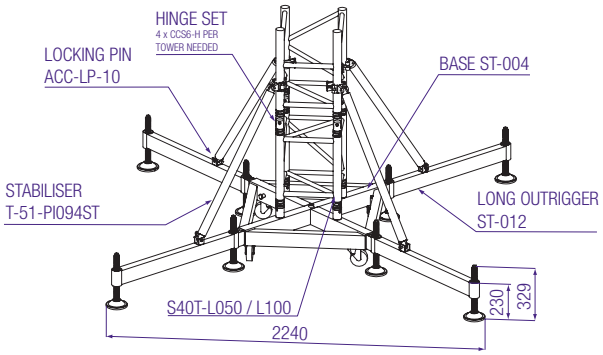

ST-004

Base with ST-012 long outriggers

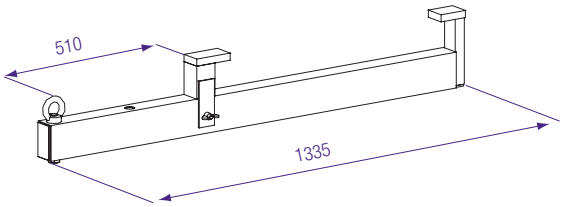

ST - 041

ST Motor attachment. WLL 1000 kg.

ST - 010 Sleeve Block - Allowable cantilever load

Length (L)	S52V/SV P (kg)	S52F P (kg)	B100RV P (kg)	S100F P (kg)
1	1565	833	3773	1040
1,5	1321	716	3356	976
2	1140	626	3020	918
2,5	1001	556	2651	865
3	890	472	2356	816
3,5	800	389	2115	771
4	724	324	1991	727
4,5	660	271	1744	632
5	605	226	1598	554
5,5	557	188	1470	487
6	515	153	1358	429

POINT LOAD

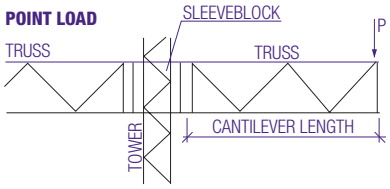

ST - 009

Top section with added wheels for optimal dead hang position (optional available) Pully suitable for 6, 7 and 8mm chain.

ST Safe

Code	Pieces	Description
ST-010-SAFE	2	SLEEVEBLK,SAFETYBAR,S52/100
BM-M16x120	4	BLT M16X120 8.8 DIN931
BM-M16-SW	4	WSHR M16 SPRNG DIN127B
SP-WHEEL-SAFE-009	2	POCKET WHEEL FOR 10MM CHAIN L=46.00
ACC-LP-30	2	LOCKING PIN 30MM L=147.00
ACC-LP-30-S	2	LOCKING PIN 30MM SHORT L=101.40
CCS7-705	4	SPIGOT R-SPRING, CCS 700
SP-MPT-TOW-009-B	4	BEARING FOR MPT009
CH-10-450CRR	1	CH.3T L=450, CLUTCH+RING

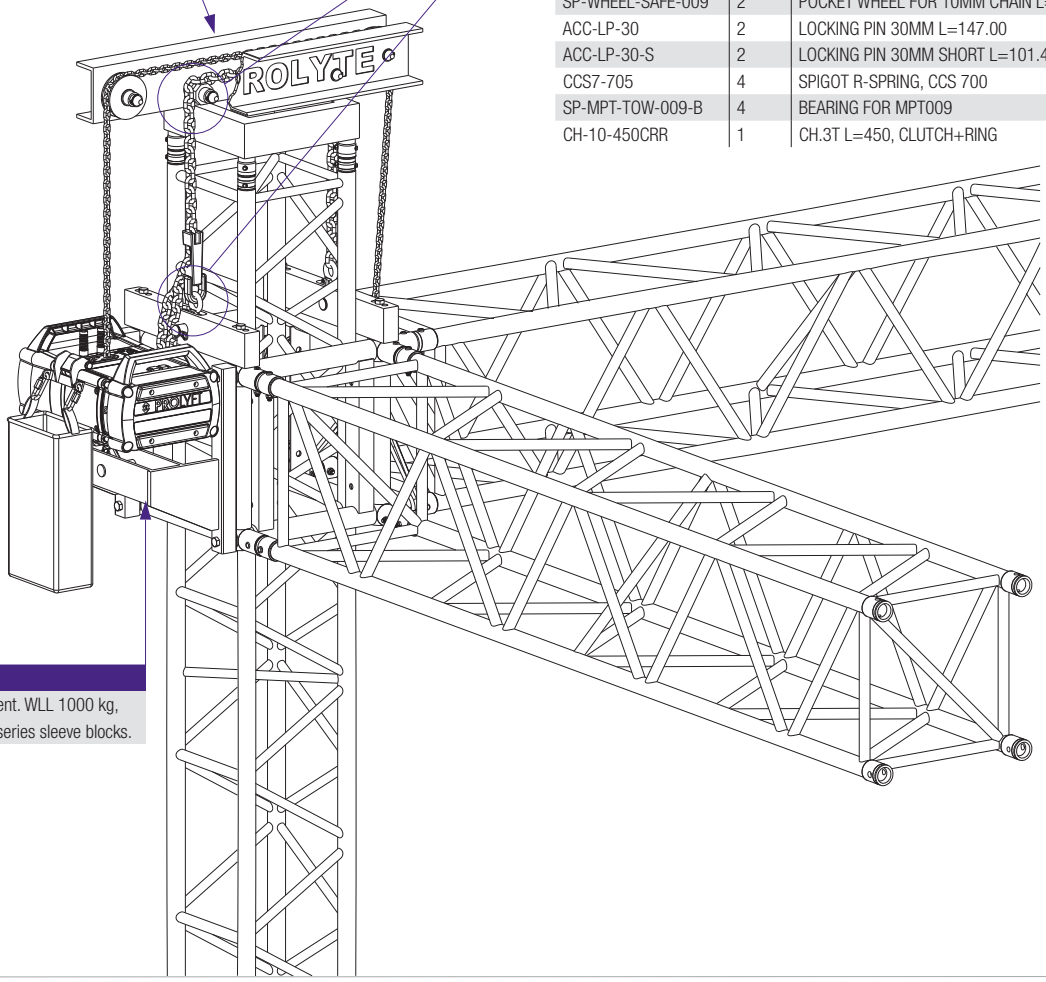

ST - 042

ST Motor attachment. WLL 1000 kg, available for all S-series sleeve blocks.

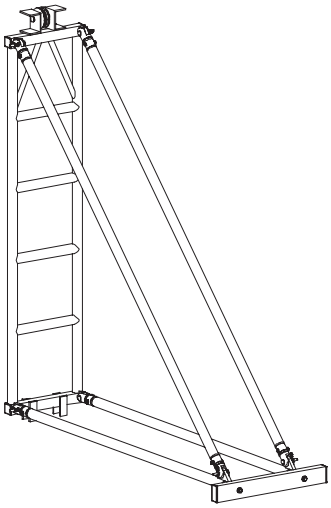

ST-HELP erecting system

The ST-HELP can be used to erect the ST towers.
Use with a 1ton electrical chain hoist.
Attach to truss by means of a ratchet strap. Read the manual first!

1 The black coated, steel base (ST-004) is equipped with 4 castors and four female couplers (CCS6-651) for attachment of the mast section. In most cases, the first mast section can be 50 cm long; however, when S66 or S100 truss is used in the grid a mast section of 100 cm should be used. The base can be used with either short outriggers (ST-011) or long outriggers (ST-012).

2 To secure the outriggers within the base, a trigger pin is placed on the inside of the base frame. Pull the pin outwards when mounting the outriggers.

3 The ST tower can only be used with a chain hoist. The hoist can be attached in two ways (please see pictures 7 and 8).

4 Disassemble the hinge set, mount the half hinges to both mast sections (S40T truss). Male and female connections should be mounted diagonally (as shown in the picture), in order to facilitate the erection of the mast.

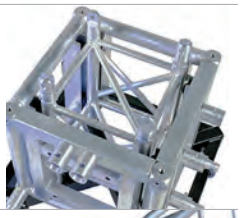

5 A completely mounted hinge set. First locate the hinge pins on one side. The truss now works as a hinge and can be erected easily. Then locate the remaining hinge pins on the other side to fix the mast into position. Per tower 4 x CCS6-H are needed (hinge set MPT•ST tower). Only use CCS-604ST spigot pints to connect the mast sections, to prevent damage to your sleeve block and the risk of getting “stuck”.

6 Unscrew the screw jacks in the outriggers, making sure that the castors of the base are free of any load. The complete load of the base should be supported by the screw jacks. Level the base by adjusting the screw jacks. The base must be perfectly level before the mast is erected. Long outriggers are needed for structures with three towers or less.

7 To use the ST tower in combination with a chain hoist, ProlyteStructures provides the motor attachment (ST-041). This supplementary component can be attached to the base and has a fixing point for the chain hoist hook. WLL 1000 kg.

8 Chain hoists can be attached by use of the motor attachment (ST042). Chain hoists can also be mounted to the grid and sleeve block.

9 ProlyteStructures advises that during storage and transportation the ST towers are mounted as an assembly of the following components; base section, 50 cm mast section, sleeve block and top section. This combination ffacilitates fast, efficient loading and building of the towers (size 80 x 80 x 120cm, weight +/- 120 kg).

ST BALLAST FRAME

The ballast frame ST-005 is designed to offer a safe, engineered and easy solution for your ballast requirements. These aluminium frames are simply mounted between the long outriggers of your ST- or MPT base section. Layher screw spindles are placed at the outside for optimum levelling each ballast frame. The system doesn't require any tooling. Standard, pallet-sized water tanks fit on the resulting platforms to create your ballast weight.

HOW TO USE THE BALLAST FRAME

The ballast frames should be used only in conjunction with long outriggers and stabiliser braces. All ballast frames and ballast should be positioned symmetrically. For any other needed set-ups, please contact our engineering department. The amount of ballast required for a structure is dependent on the outcome of structural analysis. Due to deflection of components not all applied ballast can be activated. The outsides will stay grounded, while the area around the tower will have the tendency to tip or be lifted (see drawing example).

MPT-005 SPECIFICATIONS	
Weight	ST-005: 29,15 kg/frame
Article Code:	ST-005 St ballast frame 1350kg
Additional items required:	2 x ACC-SPIN-LAY/60-60 SCREWJACK per frame are needed.

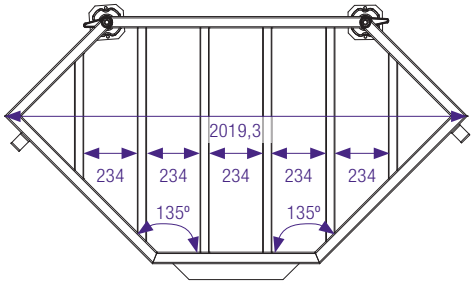

Photo: ModifiC, Russian Federation. Project: Russian telecommunication company “Caravan”.

The CT tower is based on C52T mast sections. These mast sections have onesided horizontal bracing to facilitate safe and easy climbing of the towers. C52T truss is constructed of main tubes of 60 x 5 mm and diagonals of 30 x 3/48 x 3 mm. Use the CCS7 coupling system with the CCS7-704 or CCS7-703-C52T shortened spigot pin. The base section of the CT tower is similar to the ST tower; the outside dimensions and setup are the same. Extra spindles are added to the base section to absorb the extra forces resulting from the tower’s higher loading capacity. Existing ST base sections can be upgraded to accommodate CT towers on request.

The CT tower uses several sleeve blocks that combine all the trusses from the S and B Series. This makes it possible to fit almost all S Series trusses to all four sides by means of bolted female CCS7 couplers. The outside dimensions of the CT sleeve block are the same as the ST sleeve block; both can be combined in one grid. The CT tower has a self-weight of 140 kg. The CT sleeve block is a fully bolted structural element, making it much stronger and more precise than conventional welded versions.

The CT tower is a cost-effective investment. You need only purchase the special parts if you wish to expand your truss system with towers.
There is a structural relation between tower length and size. Additionally, the applied load and the method of restraining the tower base also contribute to determination of the total loading capacity. All these factors must be taken into consideration when determining the allowable load and tower length. The allowable load given is based on a uniformly distributed load (UDL). Load cases with several point loads can show much better loading capacities.

CT Series - standard available lengths										
Meters	0,5	1,00	1,50	2,00	2,50	3,00	3,50	4,00	5,00	Avarage weight per meter = 16,5 kg.
Feet	1,64	3,28	4,92	6,56	8,20	9,84	11,48	13,12	16,4	Avarage weight in pounds per feet = 11,1 lbs.

C52T - Allowable loading

SPAN		Uniformly Distributed Load UDL		DEFLECTION		MAXIMUM ALLOWABLE POINT LOADS: Centre Point Load CPL		DEFLECTION		Single Load Third Points Load per Point TPL		Single Load Fourth Points Load per Point QPL		Single Load Fifth Points Load per Point FPL		SPAN
m	ft	kg/m	lbs/ft	mm	inch	kgs	lbs	mm	inch	kgs	lbs	kgs	lbs	kgs	lbs	total weight
6	19,7	933,4	628,0	21	0,8	3049,7	6730,6	17	0,7	2045,5	4514,3	1687,8	3724,9	1396,5	3082,0	114
7	23,0	798,1	537,0	28	1,1	2716,4	5995,1	23	0,9	1809,1	3992,6	1517,7	3349,6	1197,4	2642,7	133
8	26,2	696,7	468,8	37	1,5	2446,1	5398,6	30	1,2	1647,4	3635,9	1378,7	3042,8	1058,1	2335,2	152
9	29,5	613,6	412,9	47	1,8	2222,1	4904,2	38	1,5	1510,8	3334,4	1238,0	2732,4	957,8	2113,8	171
10	32,8	494,5	332,7	58	2,3	2033,2	4487,4	46	1,8	1393,7	3075,9	1121,9	2476,0	873,7	1928,3	190
11	36,1	406,3	273,4	70	2,8	1871,6	4130,6	56	2,2	1292,1	2851,6	1024,3	2260,6	802,2	1770,4	209
12	39,4	339,3	228,3	83	3,3	1731,4	3821,3	67	2,6	1202,9	2654,8	940,9	2076,6	740,5	1634,3	228
13	42,6	287,1	193,2	98	3,8	1608,6	3550,2	78	3,1	1124,0	2480,6	868,8	1917,5	686,7	1515,5	247
14	45,9	245,7	165,3	113	4,5	1500,0	3310,4	91	3,6	1053,5	2325,1	805,8	1778,3	639,3	1410,9	266
15	49,2	212,3	142,8	130	5,1	1403,0	3096,4	104	4,1	990,1	2185,2	750,1	1655,4	597,1	1317,8	285
16	52,5	184,9	124,4	148	5,8	1315,8	2904,1	119	4,7	932,8	2058,6	700,5	1545,9	559,3	1234,5	304
17	55,8	162,3	109,2	167	6,6	1237,0	2730,0	134	5,3	880,5	1943,3	655,9	1447,6	525,3	1159,2	323
18	59,0	143,3	96,4	187	7,4	1165,1	2571,4	150	5,9	832,7	1837,7	615,7	1358,8	494,3	1090,9	342
19	62,3	127,2	85,6	209	8,2	1099,4	2426,3	167	6,6	788,6	1740,5	579,1	1278,0	466,0	1028,5	361
20	65,6	113,5	76,4	231	9,1	1038,8	2292,7	185	7,3	747,9	1650,7	545,6	1204,1	440,1	971,2	380
21	68,9	101,7	68,4	255	10,0	982,9	2169,2	204	8,0	710,2	1567,3	514,8	1136,2	416,1	918,4	399
22	72,2	91,5	61,5	280	11,0	930,9	2054,6	224	8,8	674,9	1489,6	486,4	1073,4	393,9	869,4	418
23	75,4	82,5	55,5	306	12,0	882,5	1947,8	245	9,6	642,0	1416,9	460,0	1015,2	373,3	823,9	437

- Tüv certification only valid for loading table above.
- Loading figures are only valid for static loads.
- Loading figures are only valid for single spans with supports at both ends.
- All static systems, other than single spans, need an individual structural calculation. Please contact a structural engineer or Prolyte Group for assistance.
- Loading figures are calculated according to and in full compliance with European standards (Eurocode).
- The self-weight of the trusses is already taken into account.
- Loading figures are only valid for the cross sectional orientation of the truss as shown by the icon in the loading table.
- The interaction between bending moment and shear force at the connection point is already taken into account.
- Truss spans can be assembled from different truss lengths.
- Read the manual before assembling, using and loading the truss.

Technical specifications CT Tower	
max. height	20,00 m
max. loading capacity*	5000 kg**
sleeve block suitable for truss-series	S52F•V, S66R•V, S100F and B100RV (with various sleeve blocks)
alloy alu parts	EN-AW 6082 T6

*** To be used with chainhoist only.**

**** There is a structural relation between tower height and size, further the applied load and the method of restraining the tower base and top also have its influence on the total loading capacity. All these factors must be taken into consideration when determining the allowable load.**

More information can be found in the Prolyte BlackBook.

Technical Specifications - C52T	
Types	Tower truss
Alloy	EN AW 6082 T6
Main Tubes (Chords)	60 x 5 mm
Braces	30 x 3 / 48 x 3 mm
Coupling System	CCS7

Structural data can be found at www.prolyte.com

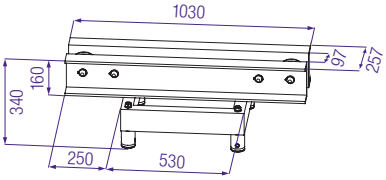

C52T-009

Top section. Pully suitable for 8 mm chain or 8 mm steelwire.

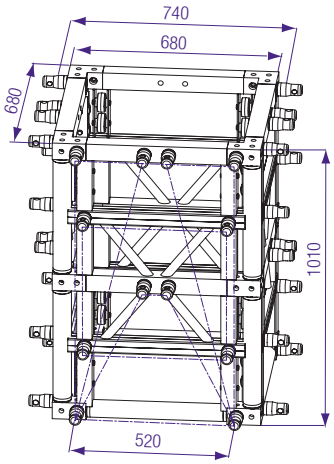

C52T 010 - 4 - 100 - 52 - 0

Sleeve block for B100RV / S52F / S52V /S100F.

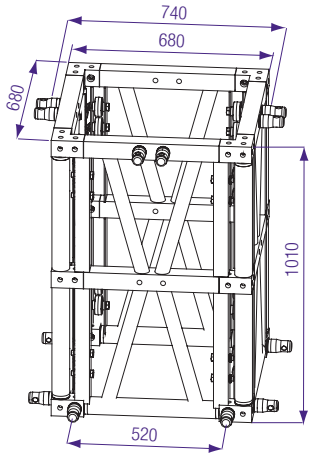

C52T 010 - 4 - 100 - 52F - 0

Sleeve block for B100RV / S52F / S100F.

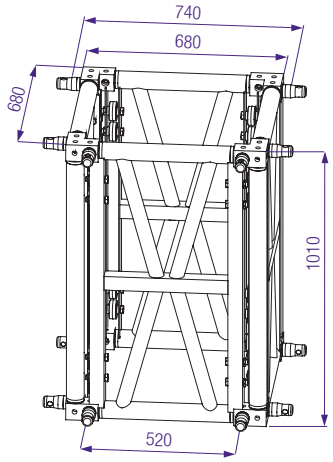

C52T 010 - 4 - B100 - 0

Sleeve block for B100RV.

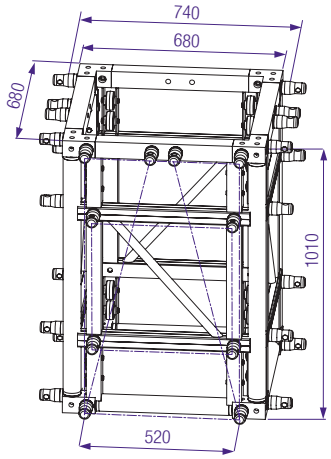

C52T 010 - 4 - 100 - 52V - 0

Sleeve block for B100RV / S100F / S52V.

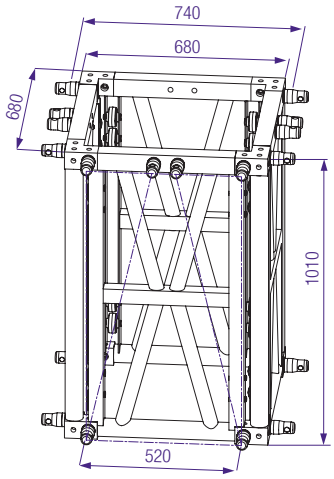

C52T 010 - 4 - B/S100-0

Sleeve block for B100RV / S100F.

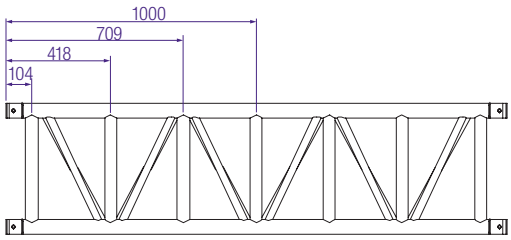

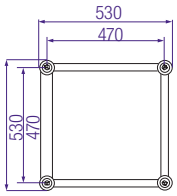

CT - 010 Sleeve Block - Allowable cantilever load

Length (L)	B100RV
	P (kg)
1	3141
1,5	2383
2	1911
2,5	1587
3	1351
3,5	1169
4	1025
4,5	907
5	808
5,5	724
6	651

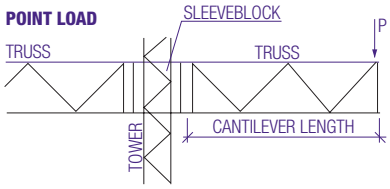

Photo: Rohr Autohaus-Optimierung, Germany. Project: Highlight Platz Grasser.

ADVERTISING TOWERS

Outdoor advertising is a perfect medium to bring products or messages to the attention of a large group. In close cooperation with Rohr Autohaus from Germany, ProlyteStructures has developed a range of towers and pylons for this type of outdoor mass communication.

RELIABLE SUPPORT

Outdoor advertising towers or billboards that are constructed from truss require extra attention with regard to setup and structural calculations. Environmental factors such as wind force have to be calculated, and furthermore, the stability of the structure needs to be guaranteed. ProlyteStructures offers a range of standard sizes of triangular as well as square advertisement towers, which all comply with the applicable regulations and standards.

BASED ON STANDARD TRUSS SYSTEMS

The standard advertising tower supports from ProlyteStructures consist of:

- Triangular towers up to 12 m in height constructed from H40V truss
- Triangular and square towers ranging from 6-10 m in height constructed from X30, H30 and H40 truss • Standalone pylons up to 10 m in height constructed from S66 and S52 truss.

The three-sided advertising space amounts to 2,5 x 2,5 m per side.
For more information, please contact Prolyte Group's Customer Services.

Photo: ProSound, South Africa.

LED OR VIDEO SCREEN SUPPORT

With the ever-increasing use of outdoor LED or video screens, Prolyte Structures has engineered the perfect solutions for hanging screens in an efficient and safe manner.
We have developed three standard screen support systems, based on the MPT, ST and CT towers. All constructions are provided with a complete set of calculations. Variations on the standard structures are available on request.

RELIABLE SUPPORT

LED Screen supports require extra attention with regard to set up and structural calculations. Environmental factors, such as wind force, have to be calculated, and furthermore, the stability of both the structure and the screen needs to be ensured.
All ProlyteStructures screen supports comply with the applicable regulations and standards, including wind force resistance up to wind speeds of 28 m/s.

EACH SYSTEM HAS UNIQUE REQUIREMENTS

Due to the complex interaction of forces resulting from screen surface, wind speeds, system weight and required screen height, each system is unique with respect to the calculation of the complete construction. Requirements for larger spans, higher loading or added screen height need to be calculated. ProlyteStructures's experienced engineering department is available to assist customers with calculations and specific construction requirements.

BASED ON STANDARD TRUSS SYSTEMS

LED screen supports from ProlyteStructures consist of standard products from both the tower and truss range. There is no need to invest in special parts. Screen supports for a wide range of applications can be configured using your standard rental stock. For more information, please contact Prolyte Group's Customer Services.

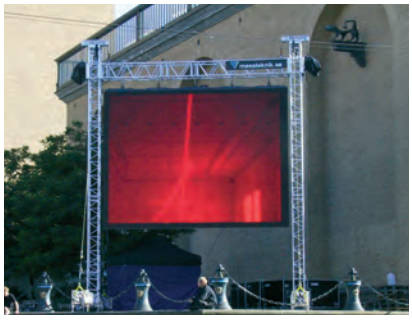

Technical specifications - Led / video screen	
Allowable loading ranging from	500 - 5000 kg
Screen surface ranging from	6 m^2 to 60 m^2
Max. Windspeed	13,8 to 28 m/s
Design Standards	EN 13814

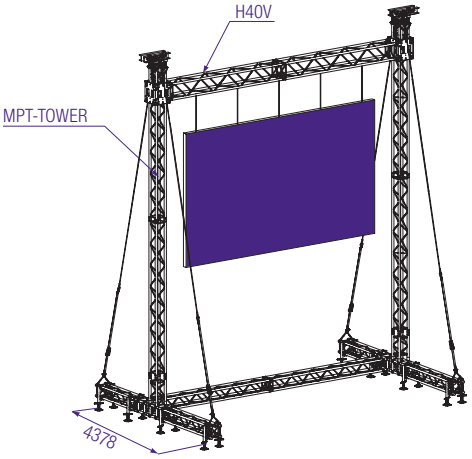

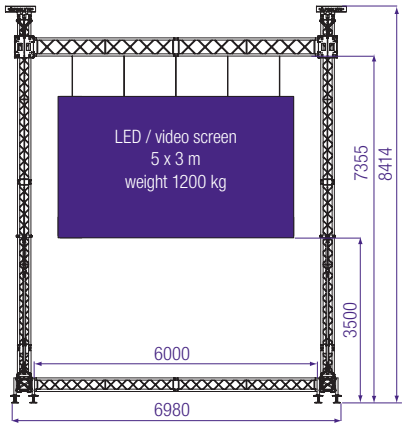

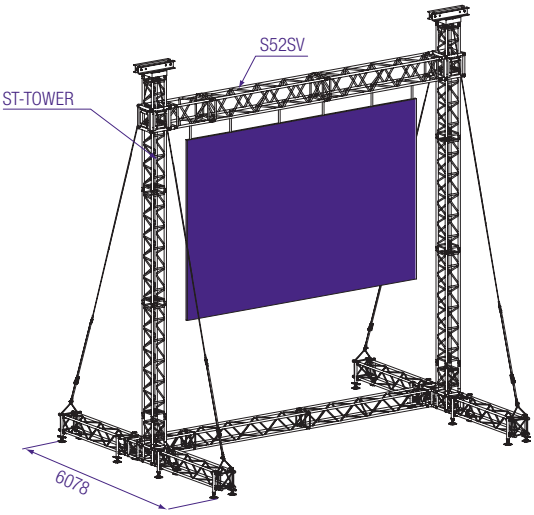

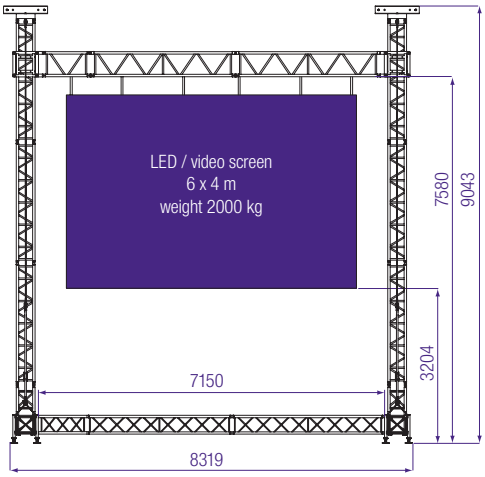

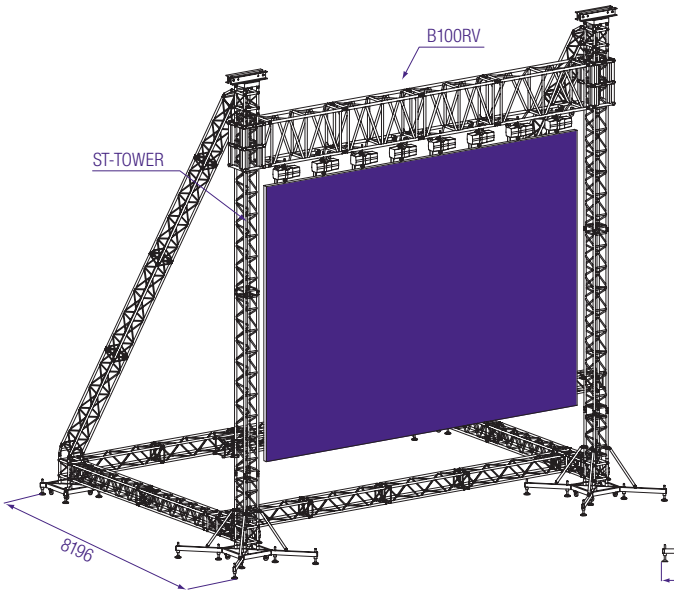

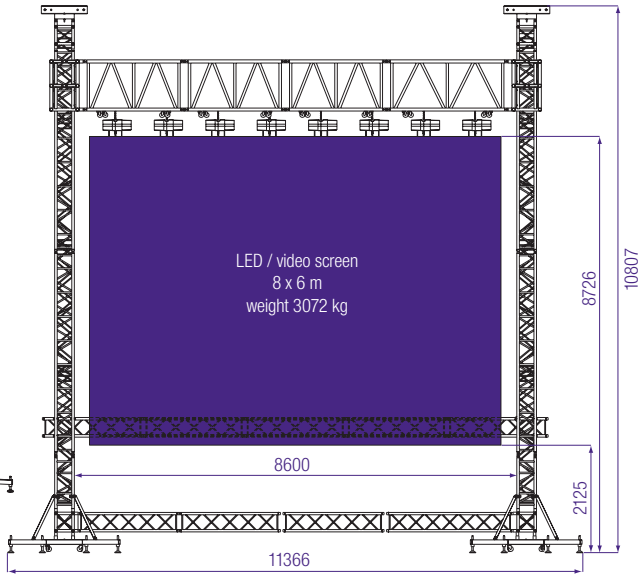

Baubuch available.

Photo: MF group, Russia

PROLYTE SYSTEMS

ProlyteSystems

ProlyteSystems offer innovative, solidly engineered solutions for constructing complex structures or roof systems for any event. Whether your event is an intimate social gathering or a massive outdoor concert, your stage design should be robust, stylish, and ready to work in any type of environment; regardless of the size or demands of your application, Prolyte offers what you need. With Prolyte you are asserted of a long-term solution next to a cost-efficient investment.

Consistent quality

ProlyteSystems are highly regarded throughout all sectors of the events and entertainment markets, a reputation earned by consistently delivering safe and solid constructions that adapt to all types of applications. In addition, Prolyte users enjoy unparalleled support with comprehensive technical assistance and training. Through product selection to build-up, training is an integral part of the delivery procedure.

A solid investment

ProlyteSystems offers tower and roof structures in various sizes and shapes. Additionally, custom constructions can be requested. All Prolyte structures are designed, engineered and manufactured to the highest standards in the industry. Setting high standards in stage design, ProlyteSystems are renowned for their easy set-up, short building times, compact transport size and high priority to safety. Where safety for performers and audiences is paramount, ProlyteSystems are a natural choice.

Photo: ModifiC, Russian Federation

PROVEN QUALITIES

ProlyteSystems are based on standard truss,providing economic packages. Our Roof Systems are modular and versatile; each roof has several set-up possibilities. They are quick and easy to assemble, saving you building time and labour costs. They have compact loading volumes, saving on shipping and storage costs. ProlyteSystems are integrated in our complete range of truss; you only need to buy the special parts, upgrading or down-sizing your roof system as required.

This approach has two main advantages:
- You can invest in a roof system on a step-by-step basis
- Out of season, the components can be added to your regular truss rental stock, thereby increasing the economic value of the system as a whole

DESIGN CRITERIA

In developing design and construction procedures at Prolyte Group, customer needs and overall satisfaction comes first. Our worldwide reputation has been built by providing systems that are ideally suited to the needs and requirements of the user. Providing comprehensive training and build-up procedures gives us access to constant feedback from the market, which in turn helps direct our design and construction methodology. Equally important, products and designs only work when they are proven in daily practise. Having extensive hands-on experience makes our engineers aware of the practical implications of their engineering work. This fact is evident in the design of ProlyteSystems Road proof. Tested. Safe. Approved. Loading data - as featured in this brochure - are based on uniformly distributed loads (UDL). Exact loading data will depend on position and weight per point. Please make sure to check the exact loading data before you apply any load.

CHALLENGE US

The specific products shown here may not be suited to your particular needs. Working with creative teams can be very challenging at times, but the Prolyte Group are always receptive to new ideas. We welcome opportunities to be put to the test. Although often it seems like we have to make the impossible happen, we always succeed in finding a fitting solution. And, what is more, we never compromise on what we know is important. All of our custom roofs are designed following the same strict design criteria, thereby offering consistent quality and safety.

STANDARD ROOF SYSTEM COMPONENTS

- Standard truss
- Standard tower systems (MPT, ST or CT)
- Special parts (such as gable parts or tent and keder profiles)
- Additional canopy or side-walls

PROVIDING THE BEST; CHANGING TO EUROCODE

Due to the activation of the EC9 standard, the Prolyte roof systems are in a transition phase. Based on its philosophy of offering only the best quality products and the safest solutions possible, Prolyte has actively engaged in re-calculating all its roof structures, to be compliant with the Eurocode. Even though Prolyte has an excellent track record of offering safe and reliable roof structures the re-design and recalculation of its roof systems is a complex process that requires a massive engineering effort.
Prolyte is working hard to complete this process ASAP.

WHAT WILL CHANGE?

Following the Eurocode the calculation has become more complex, with changes along the whole design process. The main differences are; the approach in the calculation of the safety factor, a change in the in service and out service wind loading requirements and making the practical usability of the system part of the design criteria.
Prolyte applies these new calculation rules to all its roof systems to ensure our customers and users can rely on the safest structures. That is why some configurations or dimension may change. Please consult Prolyte for an up-to-date overview of all its roof systems.

Prolyte roof systems are designed and manufactured in compliance with:

EN 1990 / EC0	Basics of structural design
EN 1991 / EC1	Actions on structures
EN 1993 / EC3	Design of steel structures
EN 1999 / EC9	Design of aluminum structures
EN-13782	Temporary structures - Tents – Safety
EN-13814	Fairground and amusement park machinery and structures – Safety
EN-12385	Steel wire ropes

Photo: Interstage, The Netherlands

DEFINITION

Mobile roof structures are predominantly used in temporary applications. They are designed and constructed to facilitate transportation and regular building and dismantling sessions at different locations.

APPLICATIONS

Mobile roof structures are mainly used in the event market, which can be defined as (but not restricted to) all activities for leisure and sports, arts and cultural performances, amusement, or presentation of products.

Examples include:
- Product presentations
- Theatre shows, musicals and operas
- Concerts, festivals and fairgrounds
- Exhibitions and trade shows
- Celebrations and parties
- Conventions and large-scale meetings

STANDARDS

Most countries apply no specific standards in reference to temporary building constructions. When defined, they usually comply with the local building regulations and therefore to standards on permanent constructions. This is a constant source of problems and discussion. Prolyte has chosen to comply to the strictest regulations that apply.

WHAT IS TEMPORARY?

How do we define temporary? Days? Weeks? Months? The publication "Temporary Demountable Structures" mentions "generally no more than 28 days". But what if this is in the middle of storm season? How temporary is a stage build for seasonal use? What are the risks of building a stage when rough weather is forecast? By what measure can we predict future circumstances? Each engineer should be aware of the possible risks and dangers beforehand, and should make decisions based on a case-by-case evaluation.

NEED TO KNOW MORE?

Please go to www.prolyte.com for more technical information on ProlyteSystems, manuals and loading tables. In the Prolyte Black Book (technical background information) we provide more in-depth technical knowledge on roof and stage structures and their application.

DO

- Get regular on-site weather information updates
- Use wind sensors to measure local/on-site wind speeds (place them at 10 m. height min.)
- Inform your crew beforehand on safety procedures in case of emergency situations like unexpectedly high wind speeds (see BSR E1.21- draft; Operations Management Plan).
- Use approved fire retardant canopies and scrims only
- Use scrim with cf factor reference only
- Make sure towers are exactly centred (out of plumb ratio should be less than 0,5%)
- Apply guy-wires at all times
- Make sure your construction is properly grounded

DO NOT

- Lift your roof to trim height without proper ballast provisions applied
- Use material in poor condition
- Allow loads to be suspended before knowing their exact weight and size
- Exceed the limits of the structural report
- Build roof structures on unstable grounds
- Leave your roof system suspended from a hoist
- Lift a roof to trim height when wind speed surpasses 7,9 m/second

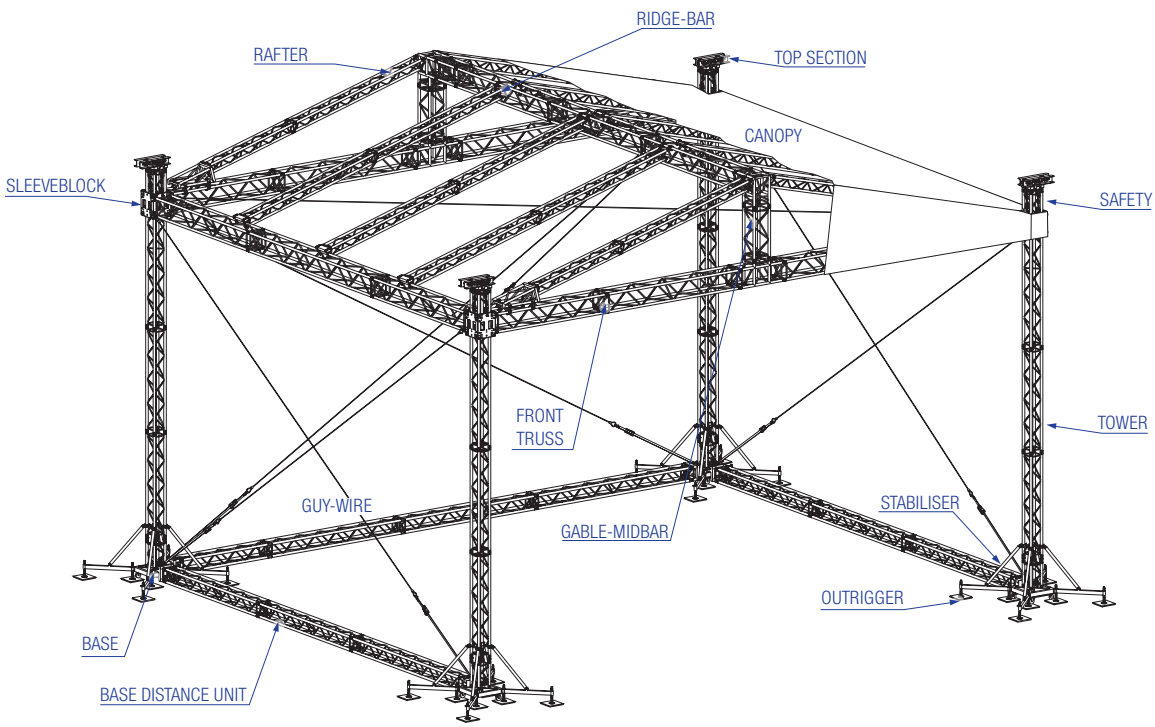

ANCHOR
Fixed point used to withstand the pulling force from the guy-wires, which absorb the horizontal loading of the roof system. The anchor should be tested or certified.

BALLAST
The amount of weight applied to a roof structure to withstand wind forces.

BASE
The tower base section transfers the vertical (axial) load from the tower to the ground. A number of screw jacks on the outriggers allow for exact horizontal placement of the base section, and enable exact vertical placement of the towers.

BASE DISTANCE UNIT (BASE-BRACERBAR)
Compression bracer between two base sections - absorbing the horizontal forces, which result from internal guy-wires.

CANOPY
The actual roof cover. Canopies should have accurate water drainage characteristics in order to prevent water traps. In most countries canopies have to comply with fire protection regulations.

GABLE
Front view of a triangular roof structure.

GABLE-MIDBAR
The central vertical part in the gable, connecting the ridge-bar ends to the centre of the horizontal gable beam.

GUY-WIRE
Steel wire bracing added to make the entire system rigid, and to transfer horizontal loads from the top of the system to the base. As a result, the towers will undergo an axial loading and no bending forces. The use of polyester ratchet straps as tensioning devices is prohibited by fire safety regulations in some countries.

RAFTER
A structural member of the roof system designed to carry the canopy loading.

RIDGE-BAR
The highest horizontal part of a triangular shaped roof.

SAFETY
A double suspension point that should be used to replace the chain of the hoist, once the roof is at trim height.

SLEEVE BLOCK
Corner or connection piece that fully encloses the tower. The sleeve block has a set of internal guidance wheels that prevent friction of metal to metal in its vertical movement.

SCRIM
Special fabric or cloth used to close the sides or sound wings of the roof structure. The scrim is often painted or printed with special decorations. Scrim should be fire-retardant, have good acoustic characteristics and be wind permeable.

STABILISER / OUTRIGGER
Bracing part of a single tube that connects the tower to the outrigger, thereby shortening the buckling length of the tower.

TOWER ('MAST', 'COLUMN')
The tower or mast section transmits the roof weight from the top-section into the base.

TOP SECTION
The highest part of the mast, transferring the forces from the chain hoist to the tower.

Photo: PROmontaje, Venezuela

CANOPY

Material

All ProlyteSystems have canopies and side-walls made of fire-retardant PVC material. This material is known as M2 (France) or B1 (Germany DIN 4102).

Colour

Standard canopies are grey on the outside and black on the inside. Other colours are available on request.

Weight

The average weight of the canopy cover is 0,8 kg/m². For the larger roof structures, the canopy is delivered in separate pieces in order to facilitate handling and transportation.

Assembly

Ratchet straps are used to tension the canopy. These ratchets are attached to the canopy using a pipe, which fits in the side of the canopy. This method guarantees even and tight fitting of the canopy over the truss structure in order to facilitate rainwater drainage. The position and resulting tension from the ratchets is calculated as an extra load in the overall calculations.

Sidewalls

The side-walls can be closed with the use of black scrim. Please make sure to use the right cf factor in order to guarantee sufficient wind permeability. For most roofs the side-walls have to be removed above certain wind speeds.

Options

- Transparent or coloured canopies and side-walls
- Built-in rain drainage system
- Repair kit
- Flight cases

BALLAST

Ballast is the additional weight needed to prevent the roof structure from being blown away as a result of wind forces. Ballast also protects against wind pressures, sliding or other hazards. Whatever type of ballast you use, it is essential that the ballast be fixed to the towers at all times. The required ballast weight can be different for each tower. Often the front towers of the structure require higher weights than the middle or rear towers.

The choice of the proper type of ballast is not easy. Environmental conditions are of great importance. The nature of soil, as well as access to ballast materials often water or sand - and transportation availability are determining factors. Possible ballast types include:

- Water tanks
- Concrete plates
- Guy-wires in combination with anchors
- Steel tanks
- Sand bags

CHAIN HOISTS

Chain hoists are used to raise and lower the entire structure. The use of electrical chain hoists guarantees an even movement of the main grid. We recommend slow travel of the whole structure; the lifting speed of the hoist should not exceed 4 m/minute. All hoists must comply with Protection Class IP 54. Hoists should be disconnected and replaced by safeties once the grid is at trim height. For optimum safety we strongly advise use a load monitoring system for large or complex roof structures.

Photo: Forsch Ink inc., Philippines

SYSTEM DESCRIPTION

The Arc Roof is a fixed construction, based on three inward-curving trusses that are mounted to side masts. A hinged connection at the outer ends simplifies system setup. Special corners connect the arches to the main grid. Different configurations are made possible by simply changing the arches. The arched trusses have a keder profile on top for fitting the optional canopy.

BASIC TRUSSING

Tower – MPT base sections
H30V truss
Grid – H30D arched truss - with keder profile

INCLUDING

- Tension gear and steel wires
- Comprehensive building manual
- Structural report

ROOF STRUCTURE	
Towers	Non. Portal structure, MPT base sections and H30V truss
Main grid	H30V truss and 6 special corners
TECHNICAL SPECIFICATIONS - ARC ROOF	
Dimensions	10 x 8 m , 8 x 6 m, 6 x 4 m, (32'9" x 26'3"), (26'3" x 19'8"), (19'8" x 13'1")

Consult Prolyte for up-to-date information on loading capacity, wind speed, total weight and transportation volume in line with the Eurocode regulations.

OPTIONS	
Canopy	side, back and top
Canopy colour	standard: outside grey, inside black (other colours possible)
Soundwings	no
Ballast	several possibilities on request depending on construction and wind speed
Staging	Prolyte stage elements, EasyFrame B or Probeam combined with a scaffolding stage

HINGED ARC ROOF

Prolyte has developed a very clever variation to its existing Arc Roof – a hinged system. The hinged construction on the mast sections allows for construction at stage level, cutting build times and improving safety during build-up. When the complete roof is built and the canopies are in position, the entire structure can then be hoisted into position, using two manual chain hoists connected to the towers at the rear. Once the roof is lifted into place, 8 additional pins are used to secure the hinges in the masts thereby securing the complete system.
For more information visit ***www.prolyte.com/prolytesystems***

Photo: Live Systems Ltd, UK. project: Tall Ships Races Festival in the Shetland Islands

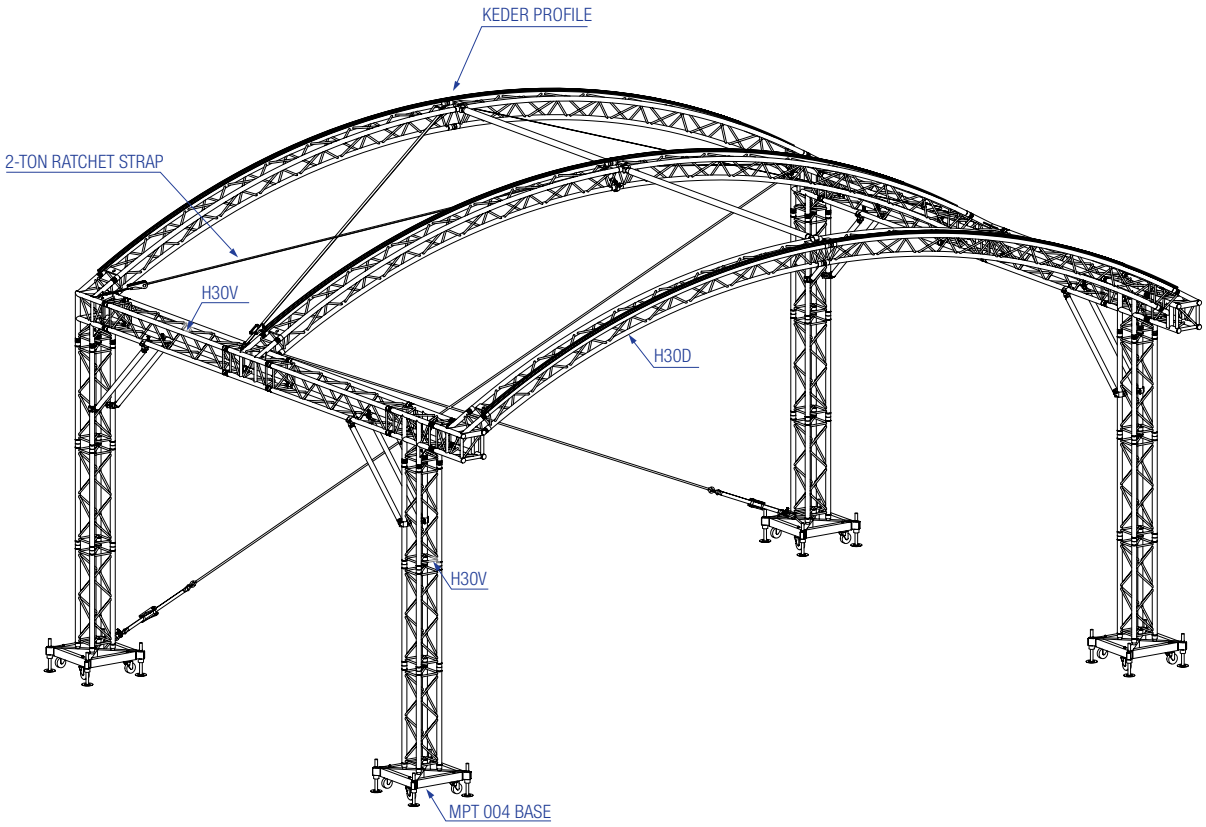

Front view - 8 x 6 m Arc

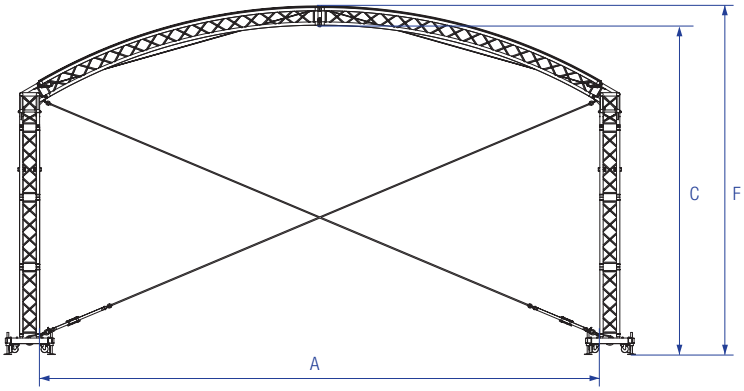

Dimensions may vary according to the type of truss required in the definitive configuration of the roof, in compliance with Eurocode.

ARC ROOF SYSTEM	
10 x 8 m	4 Arcs
8 x 6 m	3 Arcs
6 x 4 m	2 Arcs

Side view - 8 x 6 m Arc

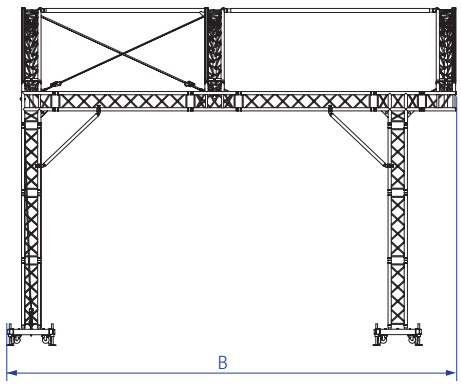

Top view - 8 x 6 m Arc

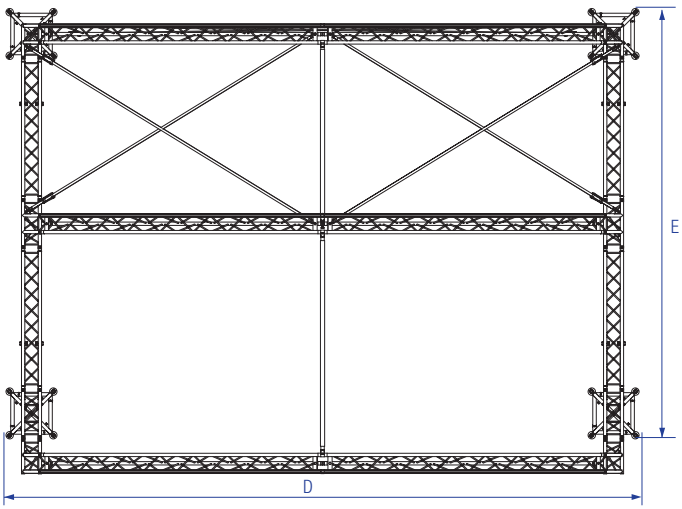

ARC ROOF SYSTEM		Inside						Overall					
Stage measurements		A		B		C		D		E		F	
10 x 8 m	32'9" x 26'3"	10,03 m	33'2"	8,42 m	27'7"	6,03 m	19'9"	11,14 m	36'6"	8,15 m	26'8"	6,31 m	20'8"
8 x 6 m	26'3" x 19'8"	8,03 m	26'7"	6,42 m	21'0"	4,76 m	15'7"	9,14 m	29'12"	6,15 m	20'2"	4,99 m	16'6"
6 x 4 m	19'8" x 13'1"	6,03 m	20'0"	4,71 m	15'5"	4,49 m	14'8"	7,14 m	23'5"	4,44 m	14'7"	4,77 m	15'8"

Photo: PIEËE Totaal BV, Evenementen en Presentatie Techniek, The Netherlands, Project: Paleis Het Loo, Apeldoorn, The Netherlands

SYSTEM DESCRIPTION

The Tunnel Roof is a fixed construction, based on inward-curving trusses that form a complete arch. The Tunnel Roof is available in two sizes: 12 m stage width combined with an arch 6 m height, or a 16 m stage width combined with an arch of 8 m height. The depth of the stage can be varied in 2 or 3 m bay sections. Each 5th section must be stiffened by guy-wires or similar support method. There is no limit to the depth of the stage.
Special adapters provide a connection between the stage floor and the truss arches. The Tunnel Roof combines very well with a StageDex stage as well as with an EasyFrame B support frame or Probeam. The arch connections are integrated in the stage floor, making it possible to use the weight of the stage as ballast for the roof. The arched trusses have a keder profile on top for fitting an optional canopy. Due to the arched construction, the Tunnel Roof is both very compact and strong.

INCLUDING

- Tension gear and steel wires
- Comprehensive building manual
- Structural report

ROOF STRUCTURE	
Towers	-
Main grid	H30D arched truss or H40V arched truss

Consult Prolyte for up-to-date information on loading capacity, wind speed, total weight and transportation volume in line with the Eurocode regulations.

OPTIONS	
Canopy	back and top
Canopy colour	standard: outside grey, inside black (other colours possible)
Soundwings	no
Ballast	several possibilities on request
Staging	Prolyte stage elements, EasyFrame B or Probeam combined with a scaffolding stage
Cantilever	yes

Photo: Codex

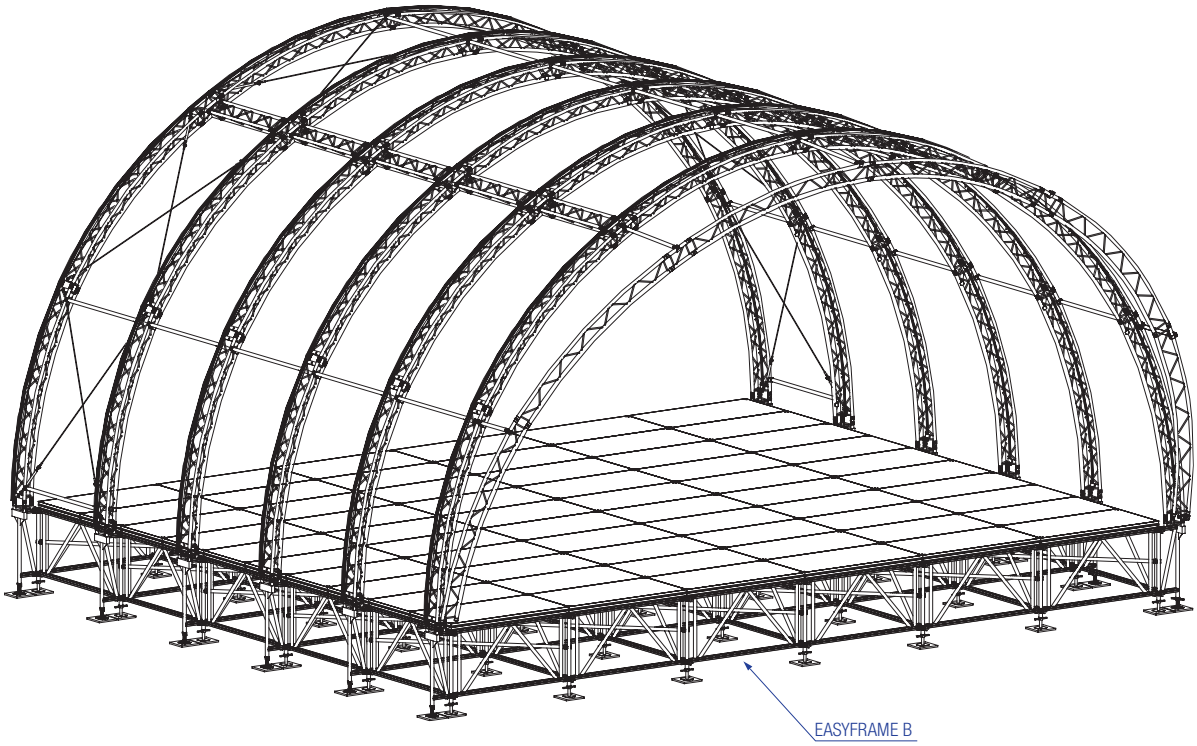

Front view

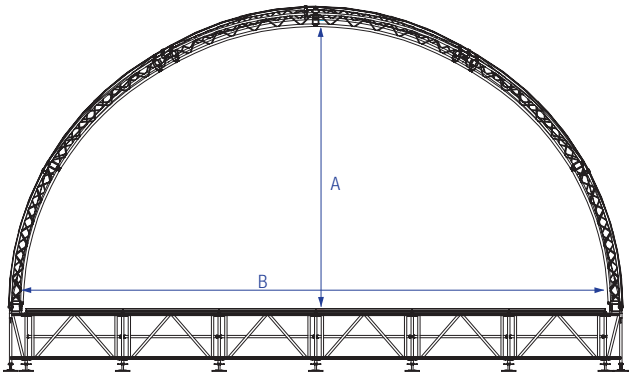

Dimensions may vary according to the type of truss required in the definitive configuration of the roof, in compliance with Eurocode.

Side view

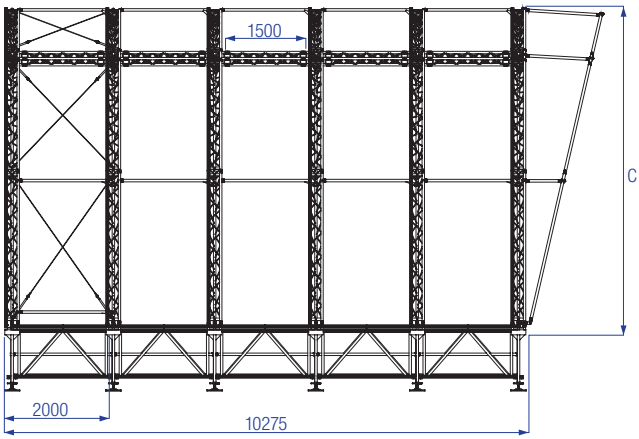

Top view

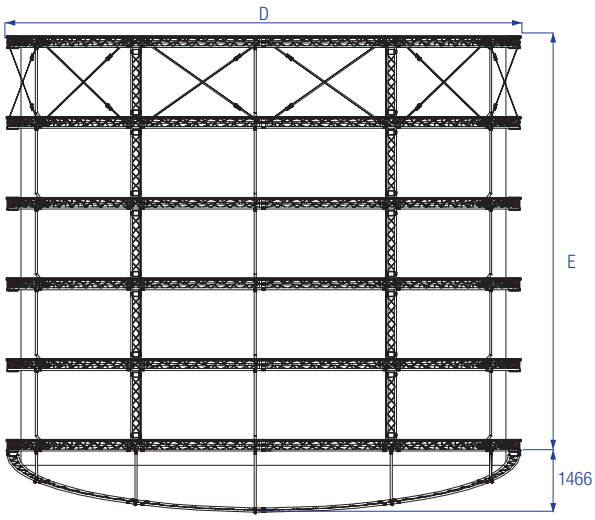

TUNNEL ROOF SYSTEM		inside				overall				
Stage measurements		A		B		C		D		E
16 m, depth variable	52'5"	7,97 m	26'1"	16,27 m	53'4"	8,00 m	26'2"	16,95 m	55'7"	variable*
12 m, depth variable	39'4"	5,97 m	19'7"	12,18 m	39'1"	6,00 m	19'8"	12,73 m	41'9"	variable*

Photo: DWR distribution, South Africa. Project: Proudly Bidvest Charity Walk

SYSTEM DESCRIPTION

A tower-based structure with a sloping roof toward the back of the stage, the Flat Roof is remarkably easy to build. Mainly based on standard trusses, the roof is available in three different sizes to provide a number of building options. The Flat roof can be considered as an entry-level system, which can easily be expanded to a MPT Roof system.

INCLUDING

- Tension gear and steel wires
- Structural report

ROOF STRUCTURE	
Towers	4 x MPT-tower, mast sections of H30V truss
Main grid	H40V and H40L truss
Consult Prolyte for up-to-date information on loading capacity, wind speed, total weight and transportation volume in line with the Eurocode regulations.	

OPTIONS	
Canopy	side, back and top
Canopy colour	standard: outside grey, inside black (other colours possible)
Soundwings	yes / loading 1000 kg each
Ballast	several possibilities on request depending on construction and wind speed
Staging	Prolyte stage elements, EasyFrame B or Pro-beam combined with a scaffolding stage
Cantilever	n.a.
ProLyft hoist 12x10 Flat Roof and accessories	4 x PAE-1000DC-0020 4 x PAE-A-FC1000 1 x PLA-33-20 2 x PLA-30-10 1 x PAE-C4DC-10 1 x PLA-41-001 4 x PAE-A-50-010 2 x PLA-30-20 1 x PLA-34-02
Comprehensive building manual	yes

Photo: DWR distribution, South Africa. Project: Proudly Bidvest Charity Walk

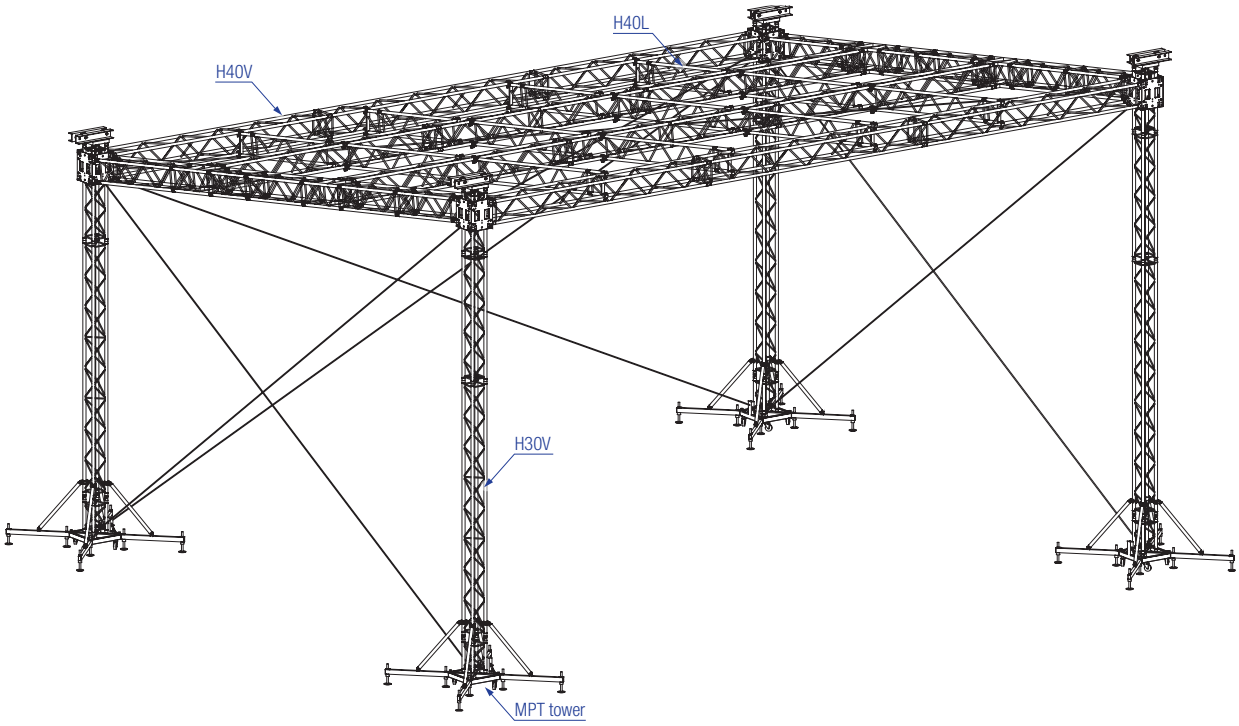

Front view

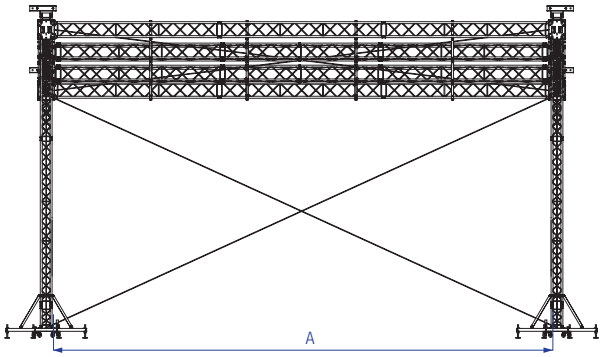

Dimensions may vary according to the type of truss required in the definitive configuration of the roof, in compliance with Eurocode.

Side view

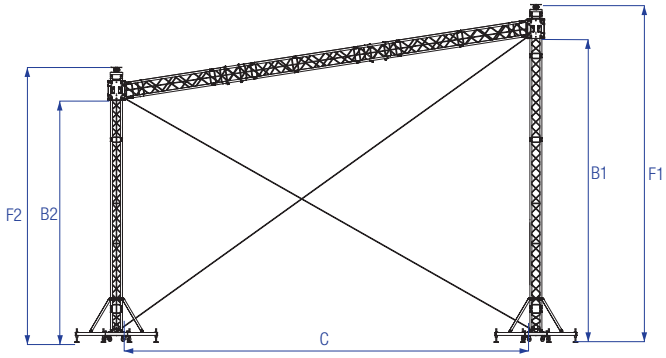

Top view

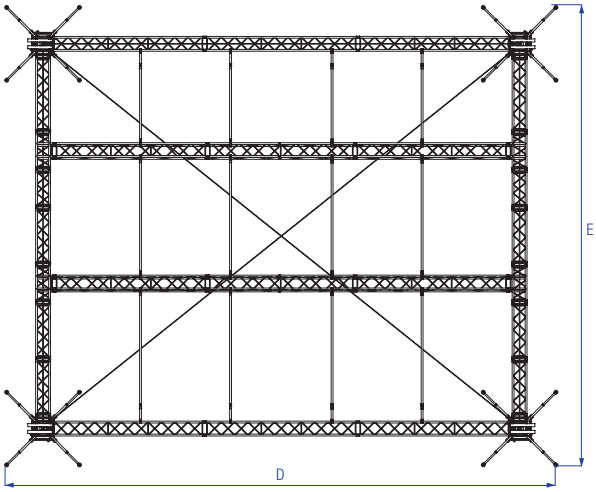

FLAT ROOF SYSTEM		Inside							
Stage measurements		A		B1		B2		C	
12 x 10 m	39'4" x 32'9"	12,15 m	39'10"	7,26 m	23'9"	5,78 m	18'11"	9,75 m	32'0"
10 x 8 m	32'9" x 26'3"	10,15 m	33'3"	7,24 m	23'6"	6,08 m	19'11"	7,78 m	25'6"
8 x 6 m	26'3" x 19'8"	8,15 m	26'7"	6,02 m	19'9"	5,16 m	16'11"	5,80 m	19'0"

FLAT ROOF SYSTEM		Outside							
Stage measurements		D		E		F1		F2	
12 x 10 m	39'4" x 32'9"	14,44 m	27'8"	12,05 m	39'6"	8,06 m	26'5"	7,06 m	23'1"
10 x 8 m	32'9" x 26'3"	12,44 m	40'9"	10,07 m	33'0"	8,06 m	26'5"	7,06 m	23'1"
8 x 6 m	26'3" x 19'8"	8,44 m	47'4"	8,09 m	26'6"	8,06 m	26'5"	7,06 m	23'1"

Photo: BVRent

SYSTEM DESCRIPTION

The CLT Roof is a tower-based structure with a curved roof. It is based on the standard MPT Roof, which can easily be transformed into a CLT Roof simply by adding a different set of top units.
The CLT rooftop section is based on arched H30D truss with integrated keder profiles to mount the canopy. These arches are supported by special frames which are mounted on the basic grid trusses.

INCLUDING

- Tension gear and steel wires
- Structural report

ROOF STRUCTURE	
Towers	4 x MPT-tower
Main grid	H40V and H30D truss

Consult Prolyte for up-to-date information on loading capacity, wind speed, total weight and transportation volume in line with the Eurocode regulations.

OPTIONS	
Canopy	side, back and top
Canopy colour	standard: outside grey, inside black (other colours possible)
Soundwings	optional
Ballast	several possibilities on request from 1 - 7,5 ton per tower depending on construction and wind speed
Staging	Prolyte stage elements, EasyFrame B or Probeam combined with a scaffolding stage
Cantilever	yes (included)
ProLyft hoist	yes (included)
(12x10 CLT roof)	4x PAE-1000DC-0020 4x PAE-A-FC1000 1x PLA-33-20 2x PLA-30-10 1x PAE-C4DC-10 1x PLA-41-001 4x PAE-A-50-010 2x PLA-30-20 1x PLA-34-02
Comprehensive building manual	yes

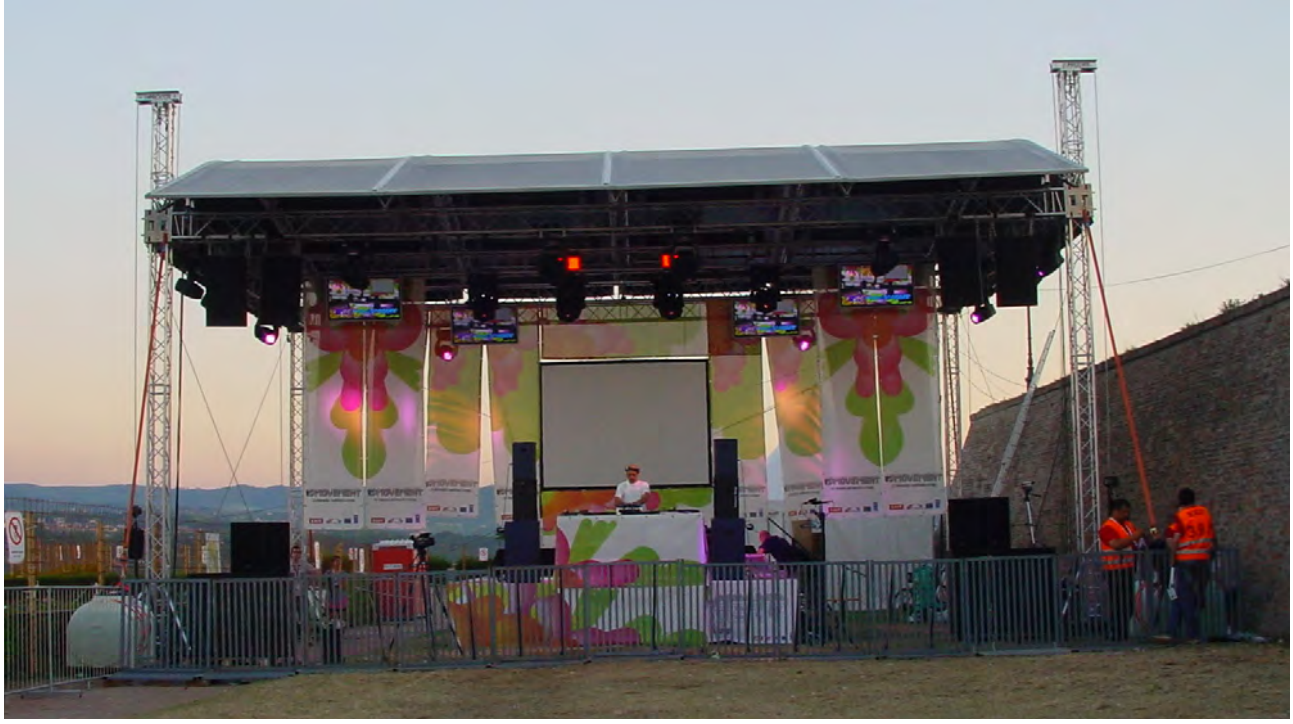

Photo: PSP ELEKTRONIK, Project: MTV stage

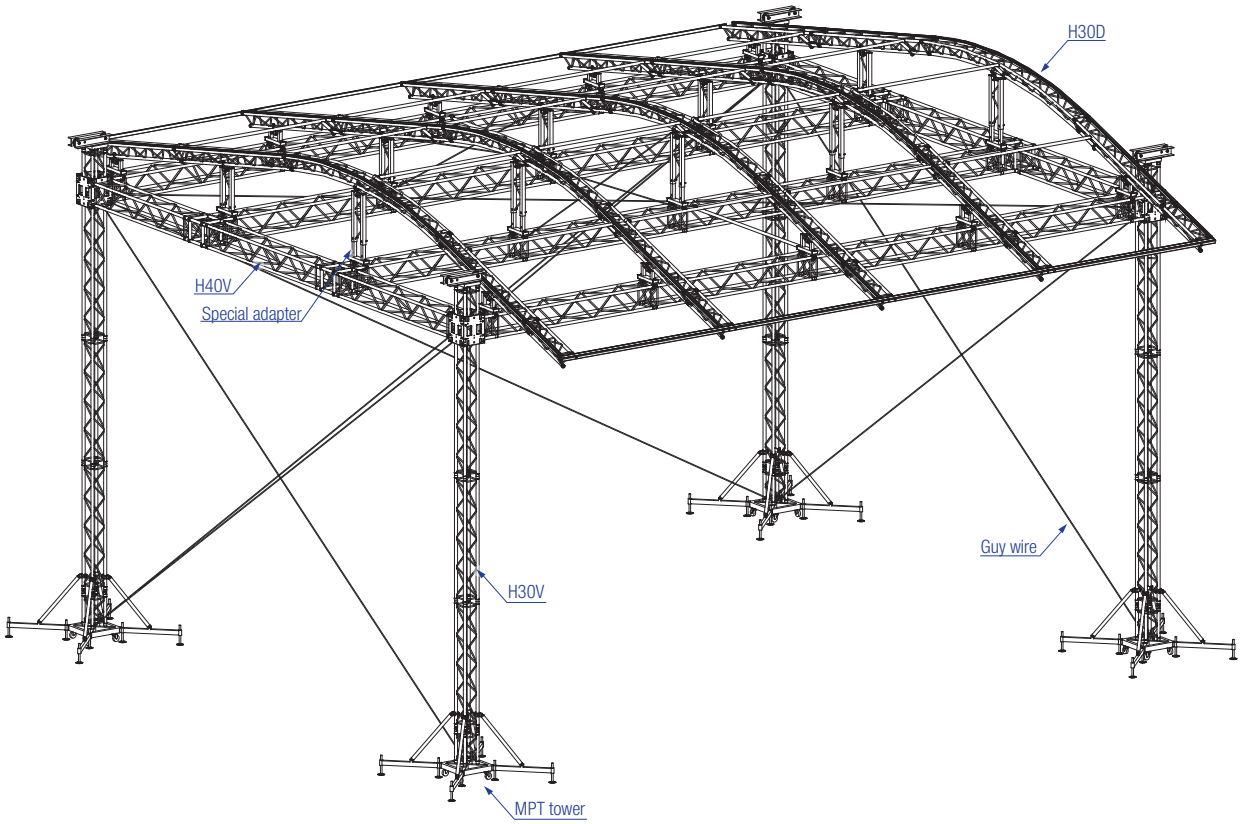

Front view

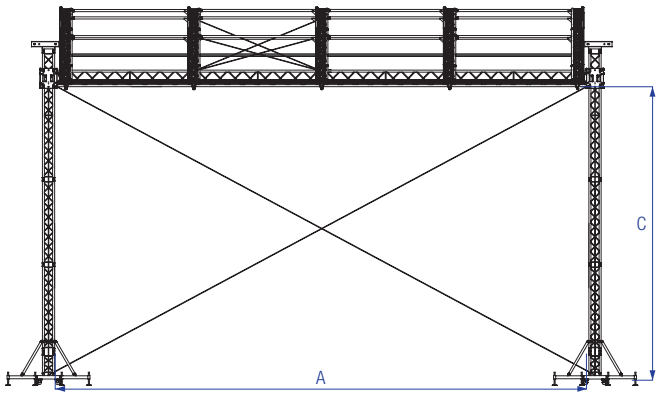

Dimensions may vary according to the type of truss required in the definitive configuration of the roof, in compliance with Eurocode.

Side view

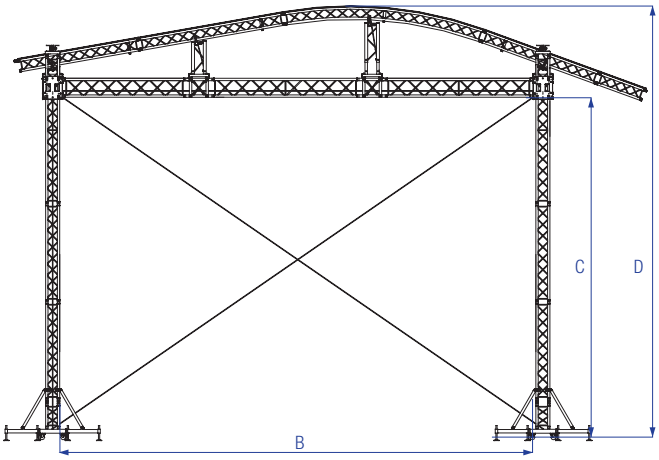

Top view

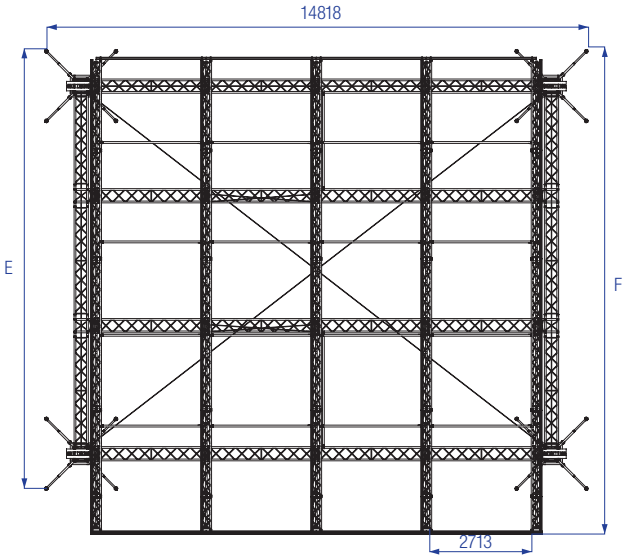

CLT ROOF SYSTEM		inside						overall					
Stage measurements		A		B		C		D		E		F	
12 x 10 m	39'4" x 32'9"	12,53 m	41'1"	9,73 m	31'9"	7,00 m	22'9"	8,83 m	28'9"	10,01 m	32'8"	13,21 m	43'3"
12 x 8 m	39'4" x 26'3"	12,53 m	41'1"	7,69 m	25'2"	7,00 m	22'9"	8,62 m	28'2"	7,98 m	26'1"	9,97 m	32'7"

CLT ROOF 12 x 8 m

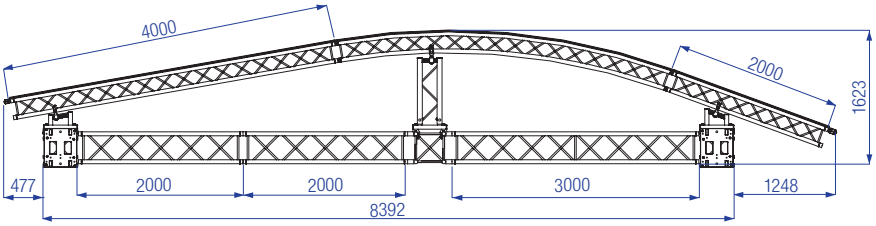

CLT ROOF 12 x 10 m

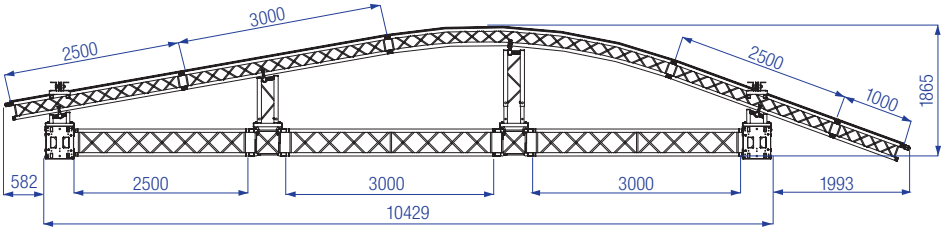

all measurements in mm

Photo: Event Structures, UK , Project: Americana festival

SYSTEM DESCRIPTION

The MPT Roof is a tower-based structure with a pitched roof, a design which guarantees optimum strength. Primarily configured from standard trusses, the MPT Roof is available in four different sizes. However, the unrivalled flexibility of the system affords nearly 40 calculated building varieties or setup possibilities for your MPT Roof. At ProlyteSystems, we are aware that every season and every event brings different demands, and accordingly we have designed the MPT Roof to accommodate an extraordinary range of applications.

BASIC TRUSSING

Tower - MPT masts system
H30V truss
Grid - H30D truss
H40V truss

INCLUDING

- Tension gear and steel wires
- Structural report I

ROOF STRUCTURE	
Towers	4 x MPT-tower, mast sections of H30V truss
Main grid	H30D and H40V truss

Consult Prolyte for up-to-date information on loading capacity, wind speed, total weight and transportation volume in line with the Eurocode regulations.

OPTIONS		
Canopy	side, back and top	
Canopy colour	standard: outside grey, inside black (other colours possible)	
Soundwings	yes / loading 1000 kg each	
Ballast	several possibilities on request depending on construction and wind speed	
Staging	Prolyte stage elements, EasyFrame B or Probeam combined with a scaffolding stage	
Cantilever	yes	
ProLyft hoist (12x10 MPT roof without sound-wings) and accessories	4x PAE-1000DC-0020 4x PAE-A-FC1000 1x PLA-33-20 2x PLA-30-10 1x PAE-C4DC-10	1x PLA-41-001 4x PAE-A-50-010 2x PLA-30-20 1x PLA-34-02
ProLyft hoist (12x10 MPT roof with sound-wings) and accessories	6x PAE-1000DC-0020 6x PAE-A-FC1000 2x PLA-33-20 2x PLA-30-10 1x PAE-C8DC-10	1x PLA-41-001 4x PAE-A-50-010 2x PLA-30-20 2x PLA-34-02
Comprehensive building manual	yes	

Photo: Metro, New Zealand, Project: Womad festival, New Zealand

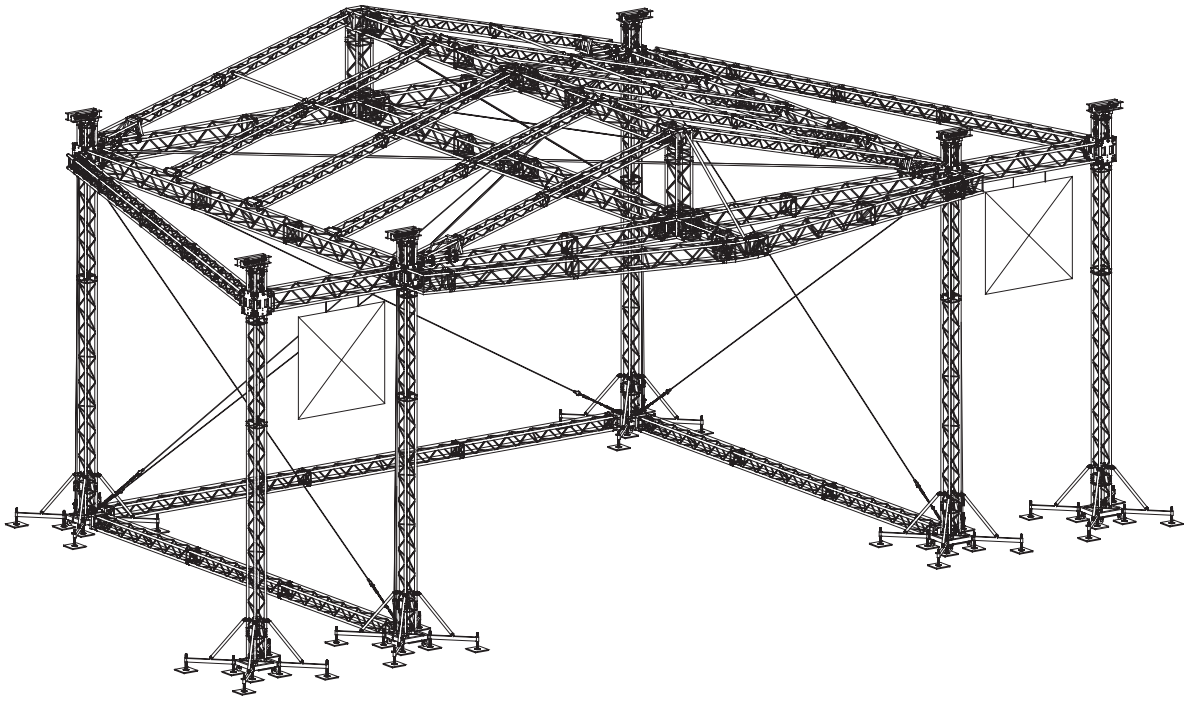

Front view

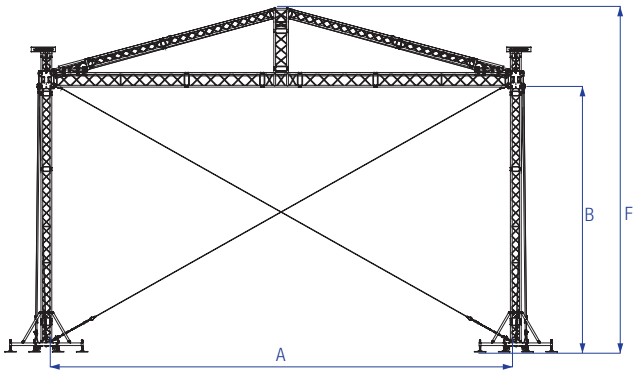

Dimensions may vary according to the type of truss required in the definitive configuration of the roof, in compliance with Eurocode.

Side view

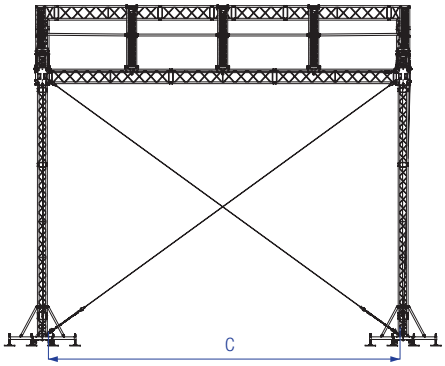

Top view

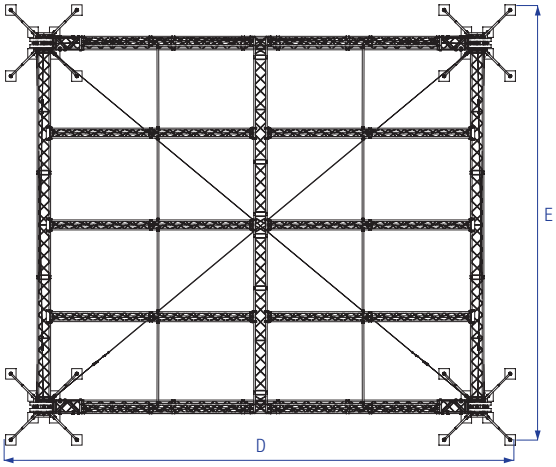

MPT ROOF SYSTEM		Inside						Overall					
Stage measurements		A		B		C		D		E		F	
12 x 10 m	39'4" x 32'9"	12,15 m	39'9"	7,20 m	23'6"	10,80 m	35'4"	14,14 m	46'4"	12,80 m	42'0"	9,26 m	30'4"
10 x 8 m	32'9" x 26'3"	10,15 m	33'3"	7,20 m	23'6"	8,80 m	28'8"	12,44 m	40'8"	9,80 m	32'1"	9,26 m	30'4"
10 x 6 m	32'9" x 19'8"	10,15 m	33'3"	7,20 m	23'6"	6,80 m	22'3"	12,44 m	40'8"	7,80 m	25'6"	9,26 m	30'4"
8 x 6 m	26'3" x 19'8"	8,15 m	26'7"	5,20 m	17'1"	6,80 m	22'3"	9,44 m	31'0"	7,80 m	25'6"	7,26 m	23'8"

MPT ROOF 8 x 6 m

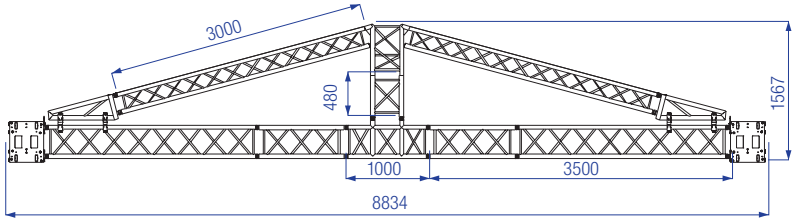

MPT ROOF 10 x 8 m

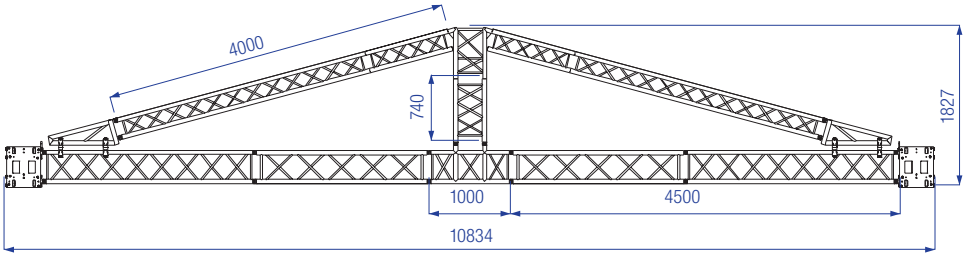

MPT ROOF 12 x 10 m

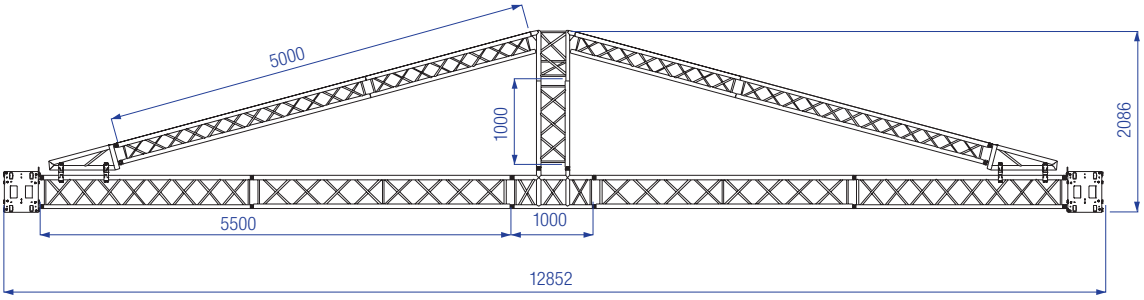

all measurements in mm

Photo: ST truss works

SYSTEM DESCRIPTION

The ST Roof is a tower-based structure with a pitched roof, a design that inherently offers optimum strength. The larger ST Series offers flexible possibilities for creating stage dimensions up to 30 × 20 m. Technical specifications available on request.

INCLUDING

- Tension gear and steel wires
- Structural report

ROOF STRUCTURE	
Towers	6 x ST-tower, mast sections of S40T truss
Main grid	S52SV truss

Consult Prolyte for up-to-date information on loading capacity, wind speed, total weight and transportation volume in line with the Eurocode regulations.

OPTIONS		
Canopy	side, back and top	
Canopy colour	standard: outside grey, inside black (other colours possible)	
Soundwings	yes / loading 2000 kg each	
Ballast	several possibilities on request from 1 - 7 ton per tower depending on construction and wind speed	
Staging	Prolyte stage elements, EasyFrame B or Pro-beam combined with a scaffolding stage	
ProLyft hoist (20x14 ST roof without sound-wings) and accessories	6x PAE-1000DC-0030 6x PAE-A-FC1000 3x PLA-33-20 4x PLA-30-10 1x PAE-C8DC-10	1x PAE-A-FC19IN4U 6x PAE-A-50-010 2x PLA-30-20 2x PLA-34-02
ProLyft hoist (20x14 ST roof with sound-wings) and accessories	8x PAE-1000DC-0030 8x PAE-A-FC1000 3x PLA-33-20 6x PLA-30-10 1x PAE-C8DC-10	1x PAE-A-FC19IN4U 8x PAE-A-50-010 2x PLA-30-20 2x PLA-34-02
Comprehensive building manual	yes	

Photo: Showtech, Dubai

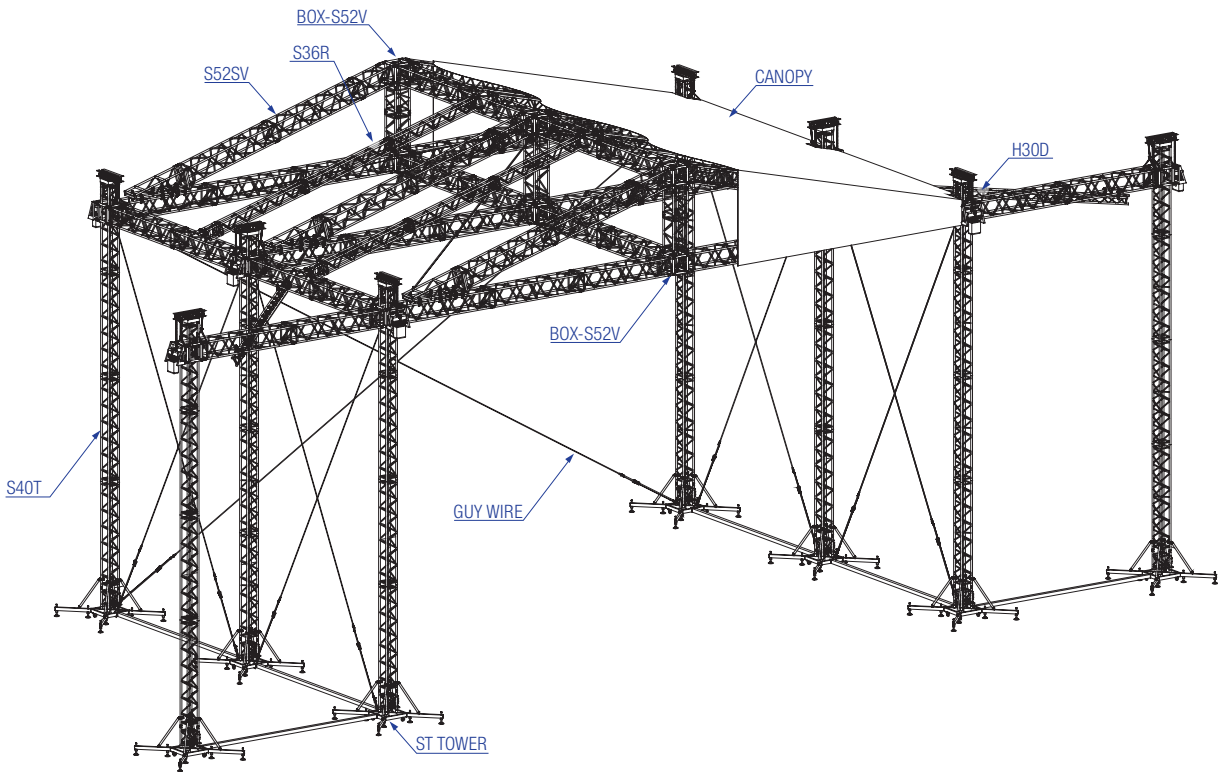

Front view

Dimensions may vary according to the type of truss required in the definitive configuration of the roof, in compliance with Eurocode.

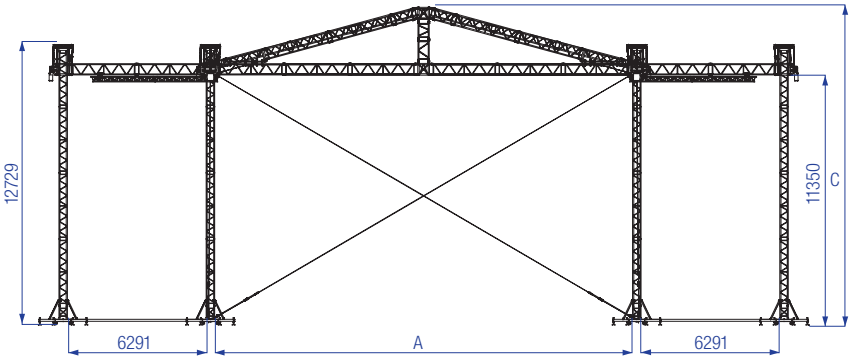

ide view

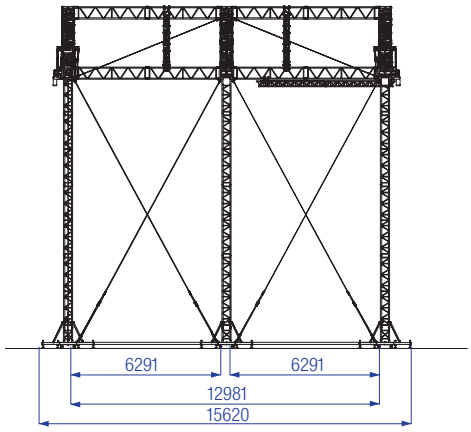

Top view

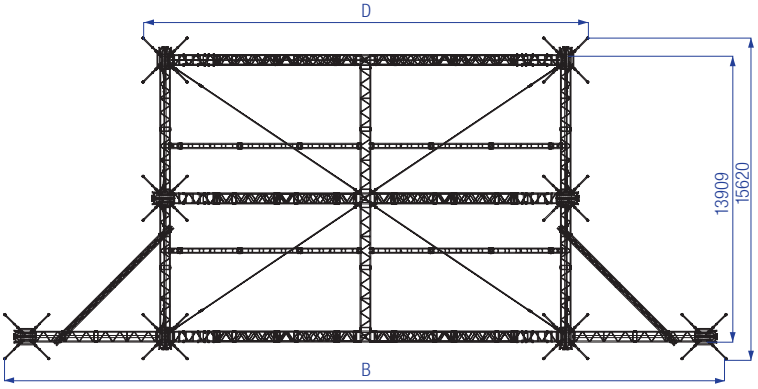

ST-ROOF SYSTEM

Stage measurements		A		B		C		D	
20 x 14 m	65'6" x 45'9"	20,99 m	68'8"	37,0 m	108'2"	14,70 m	48'2"	23,62 m	77'4"
18 x 14 m	59'0" x 45'9"	18,99 m	62'3"	35,0 m	114'8"	14,70 m	48'2"	21,62 m	70'9"
16 x 14 m	52'5" x 45'9"	16,99 m	55'7"	33,0 m	121'3"	14,70 m	48'2"	19,62 m	64'3"

ST ROOF 16 x 14 m

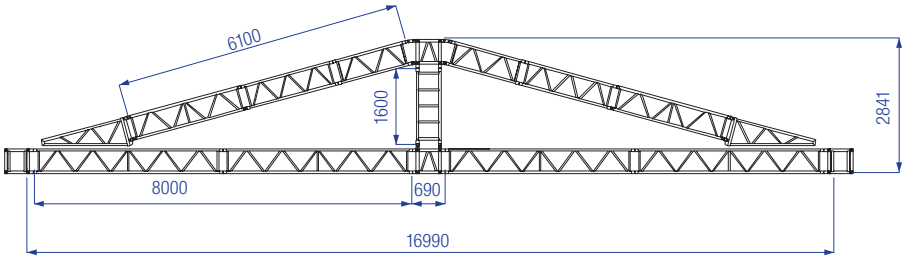

ST ROOF 18 x 14 m

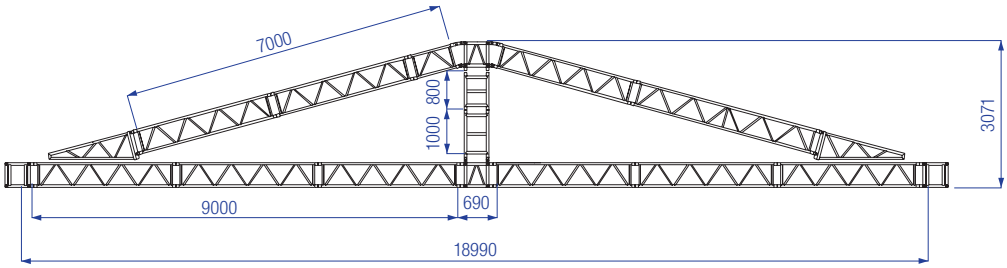

ST ROOF 20 x 14 m

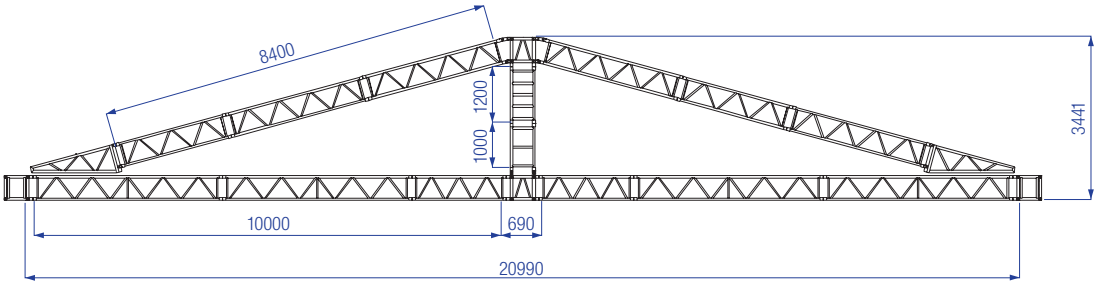

all measurements in mm

Photo: Interstage, The Netherlands Project : MBM MartyBrugmansMusic, Concert At Sea, Renesse, The Netherlands

SYSTEM DESCRIPTION

The Giant ARC Roof is a tower-based structure that is constructed using 3-to-5 arches. Straight truss sections, interconnected with bottom hinges and topside spreader plates, create the arch needed over the complete span. Two steel wires per span absorb horizontal forces caused by the loading. The arches are connected to either a standard ST or CT tower.

INCLUDING

- Tension gear and steel wires
- Structural report

ROOF STRUCTURE	
Towers	ST tower (16 x 12 m) or CT tower (20 x 16 m)
Main grid	S52SV truss (16 x 12 m) or B100RV truss (20 x 16 m)

Consult Prolyte for up-to-date information on loading capacity, wind speed, total weight and transportation volume in line with the Eurocode regulations.

OPTIONS		
Canopy	side, back and top	
Canopy colour	standard: outside grey, inside black (other colours possible)	
Soundwings	yes / loading 2000 kg each	
Ballast	several possibilities details on request	
Staging	Prolyte stage elements or Probeam combined with a scaffolding stage	
ProLyft hoist (16x14 Giant Arc Roof) and accessories	4x PAE-1000DC-0030 4x PAE-A-FC1000 2x PLA-33-20 4x PLA-30-10 1x PAE-C8DC-10	1x PLA-41-001 4x PAE-A-50-010 2x PLA-30-20 1x PLA-34-02
Comprehensive building manual	yes	

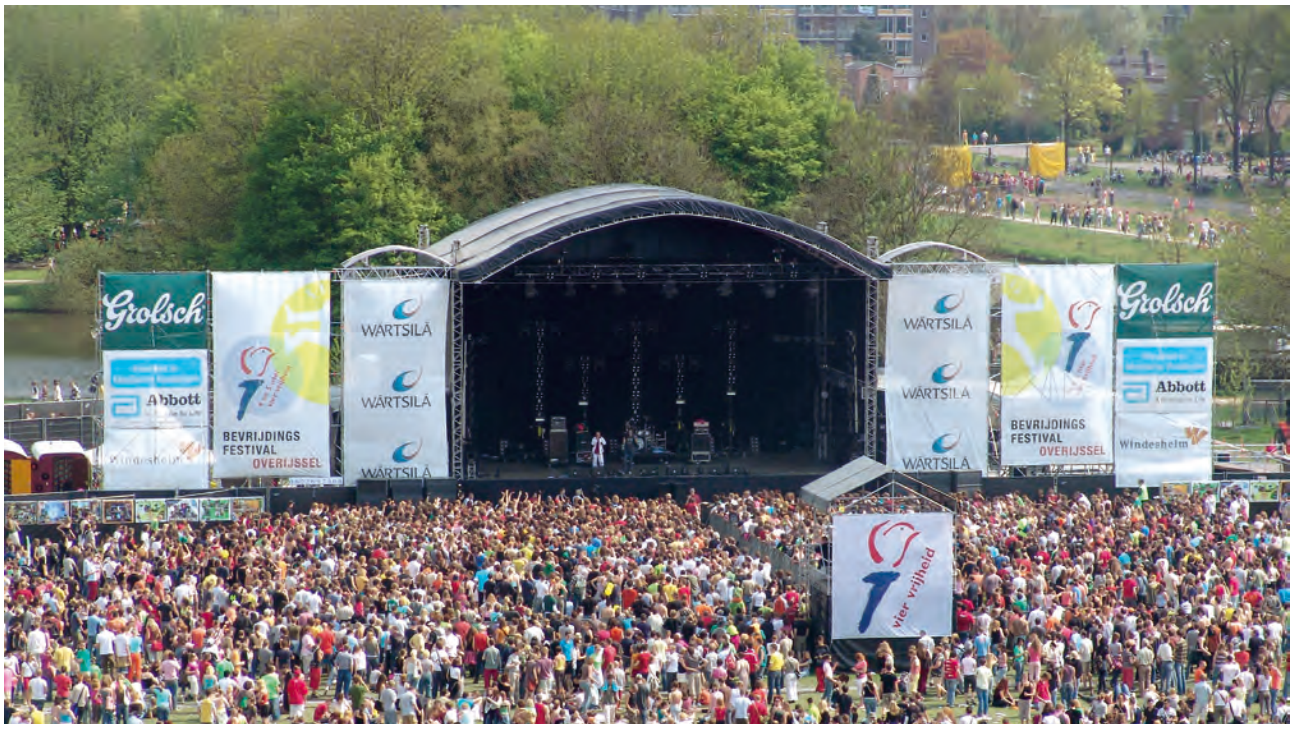

Photo: Interstage, The Netherlands, Project: Bevrijdingsfestival Overijssel, Zwolle, The Netherlands

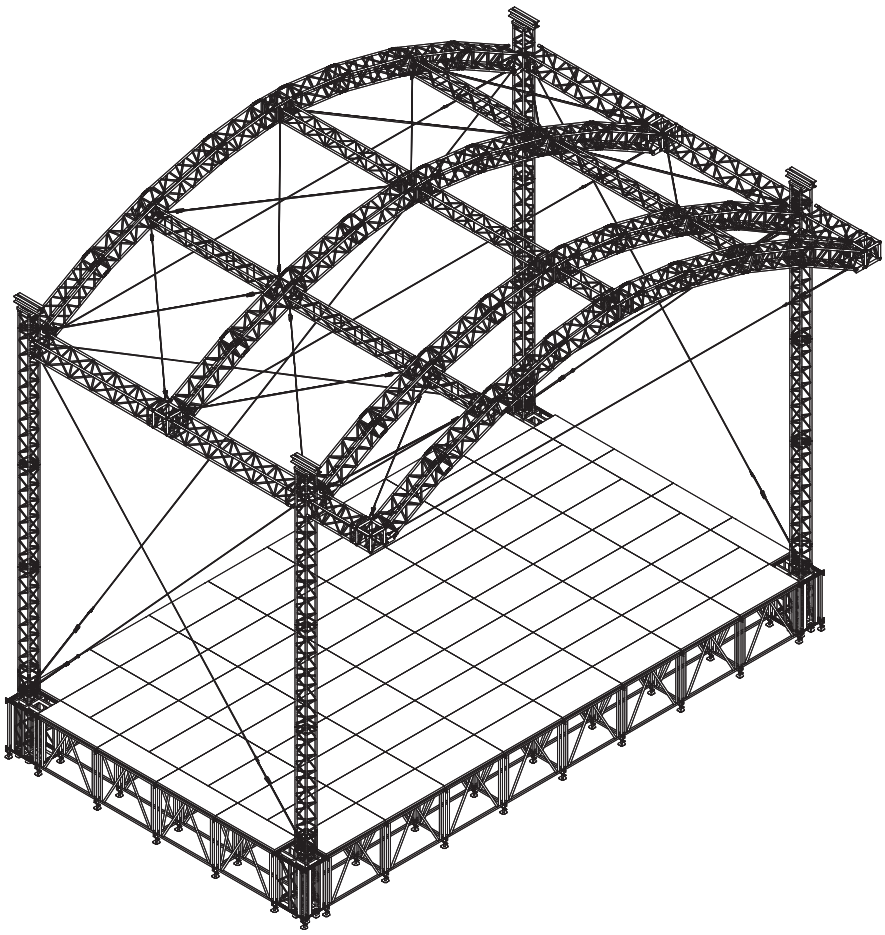

Front view

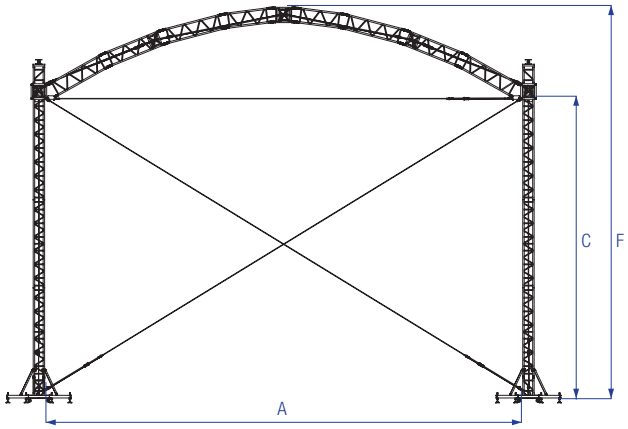

Dimensions may vary according to the type of truss required in the definitive configuration of the roof, in compliance with Eurocode.

Side view

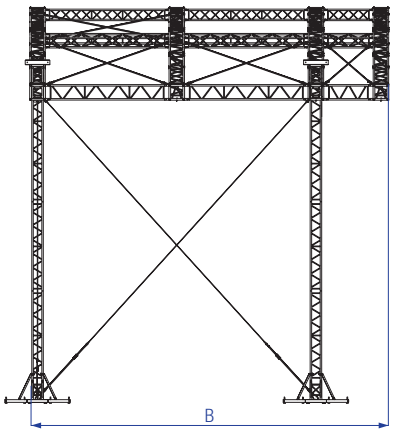

Top view

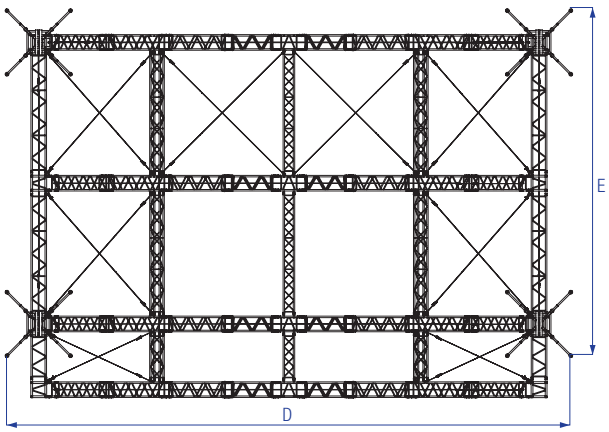

GIANT ARC ROOF SYSTEM		Inside						Overall					
Stage measurements		A		B		C		D		E		F	
16 x 12 m	52'5" x 39'4"	16,30 m	53'5"	12,09 m	39'7"	11,34 m	37'2"	18,93 m	62'1"	11,62 m	38'1"	13,47 m	44'2"

Project: MTV Award Rome

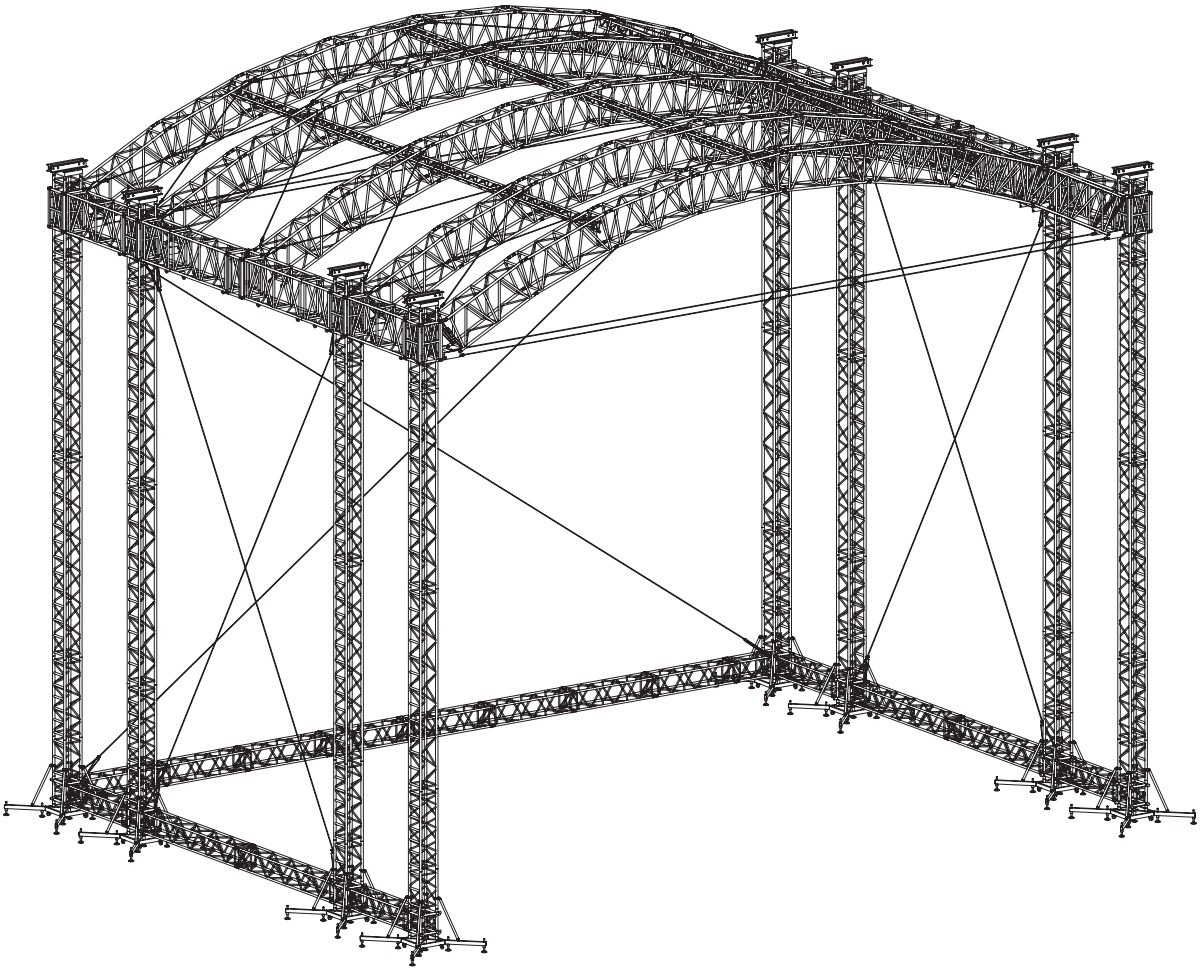

Front view

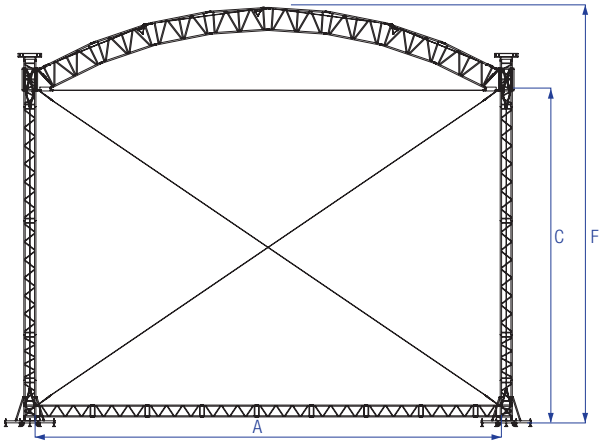

Dimensions may vary according to the type of truss required in the definitive configuration of the roof, in compliance with Eurocode.

Side view

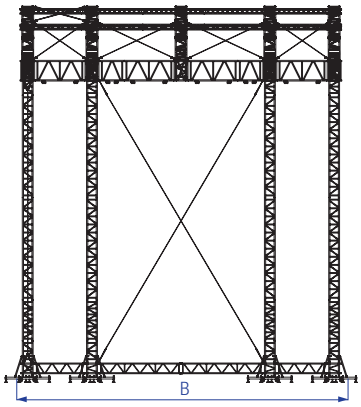

Top view

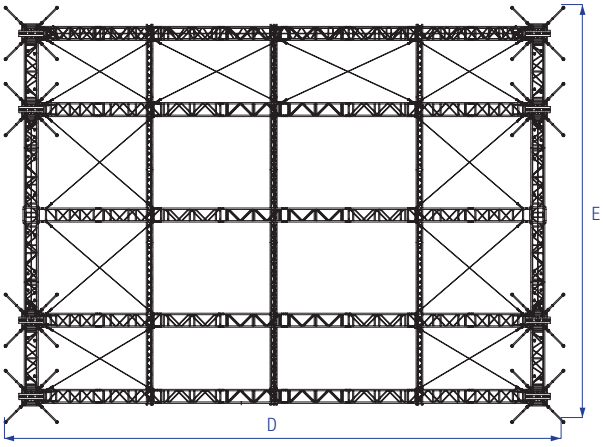

GIANT ARC ROOF SYSTEM		Inside						Overall					
Stage measurements		A		B		C		D		E		F	
20 x 16 m	65'6" x 52'5"	20,37 m	66'8"	15,65 m	51'3"	14,72 m	48'3"	23,16 m	76"	17,19m	56'4"	18,38m	60'3"

Photo: ModifiC, Russian Federation, Project: Moscow, Gorky Park, Day of Railroad man

SYSTEM DESCRIPTION

The LT Roof is a tower-based structure with a pitched roof.
Although the roof pitch is designed differently than the MPT or ST Roof Systems, it can be constructed just as easily as all ProlyteSystems. The LT Roof has a standard cantilever of 2 m at the front side.
Special tent profiles with integrated keder profile are mounted on top of the truss by means of adjustable supports. The adjustable supports make it possible to build the roof in different configurations. With the addition of an extra section, the stage depth can be extended from 10m to 15m.
Sound-wings grids with an inside width of 4,8 m are optional, built adjacent to the main stage.

INCLUDING

- Tension gear and steel wires
- Structural report

ROOF STRUCTURE	
Towers	ST or CT towers
Main grid	B100RV
TECHNICAL SPECIFICATIONS - LT ROOF	
Dimensions	25 x 15 m (984 x 590 "), 20 x 15 m (787 x 590 ") 20 x 12 m (787 x 472 "), 15 x 12 m (590 x 472 ") 15 x 10 m (590 x 393 ")

Consult Prolyte for up-to-date information on loading capacity, wind speed, total weight and transportation volume in line with the Eurocode regulations.

OPTIONS		
Canopy	top, side and back	
Canopy colour	standard: outside grey, inside black (other colours possible)	
Soundwings	yes / loading 2000 kg each	
Ballast	several possibilities on request from 1-10 ton per tower depending on construction and wind speed	
Staging	Prolyte stage elements, EasyFrame B or Pro-beam combined with a scaffolding stage	
ProLyft hoist (25x15 LT Roof without sound-wings) and accessories	6x PAE-1000DC-0030 6x PAE-A-FC1000 3x PLA-33-20 4x PLA-30-10 1x PAE-C8DC-10	1x PLA-41-001 6x PAE-A-50-010 2x PLA-30-20 2x PLA-34-02
ProLyft hoist (25x15 LT Roof with sound-wings) and accessories	10x PAE-1000DC-0030 10x PAE-A-FC1000 4x PLA-33-20 6x PLA-30-10 1x PLE-30-123	1x PLA-41-001 10x PAE-A-50-010 4x PLA-30-20 4x PLA-34-02
Comprehensive building manual	yes	

Photo: Berar studio, project: Exit Festival

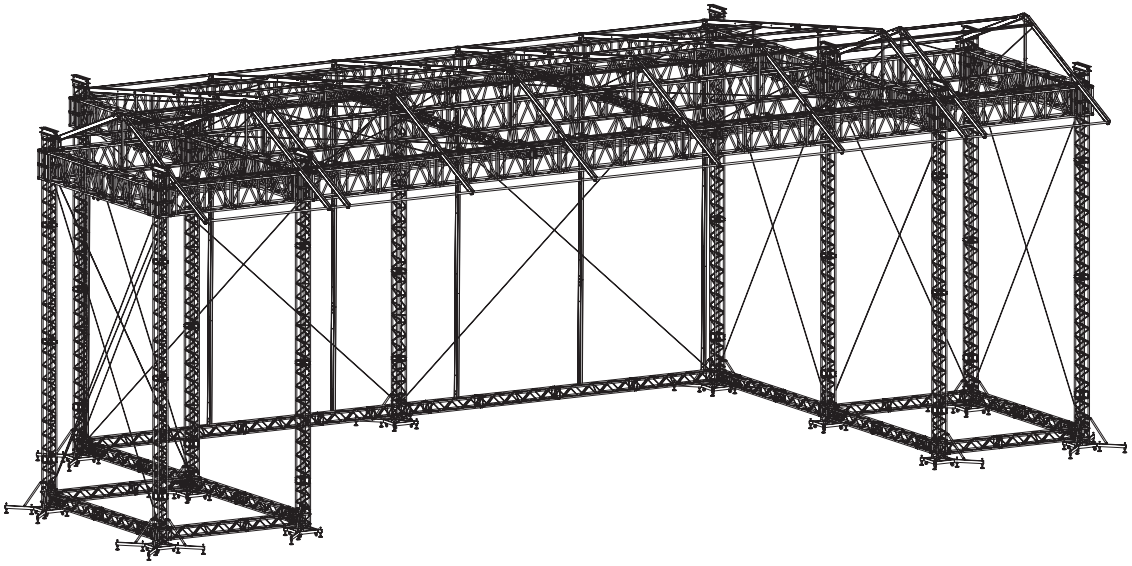

Front view

Dimensions may vary according to the type of truss required in the definitive configuration of the roof, in compliance with Eurocode.

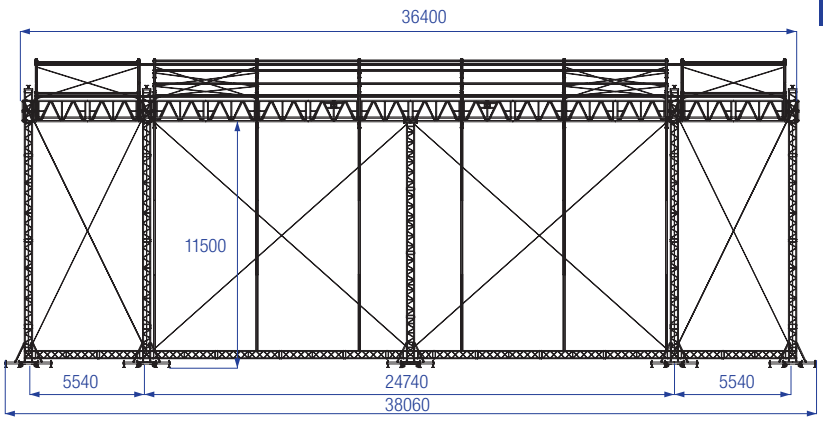

Side view

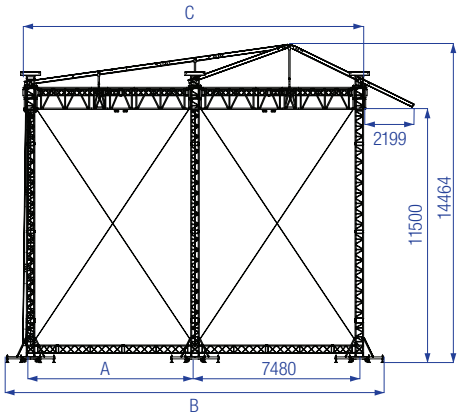

Top view

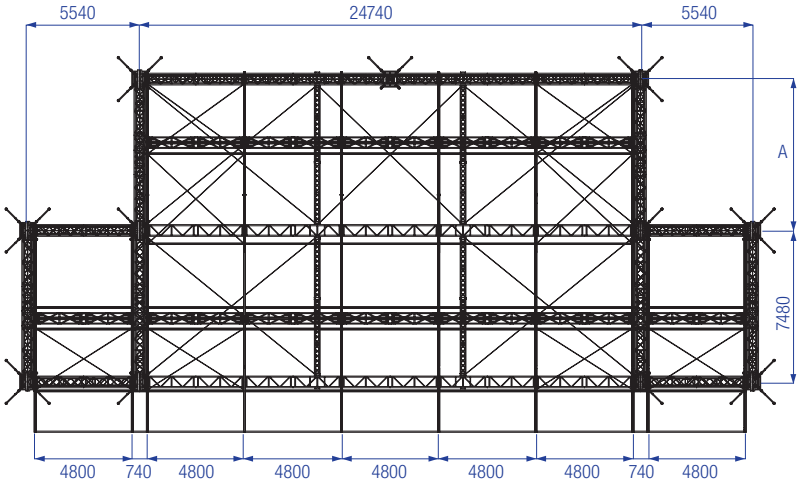

LT-ROOF SYSTEM		Inside		Overal			
Stage measurements		A		B		C	
25 x 15 m	82'0" x 49'2"	7,48 m	24'5"	17,20 m	56'4"	15,54 m	50'9"
20 x 12 m	82'0" x 39'4"	4,34 m	14'2"	14,06 m	46'1"	12,40 m	40'6"
15 x 10 m	82'0" x 32'9"	2,30 m	7'5"	11,66 m	37'2"	10,00 m	32'8"

MAIN GRID GABLE VIEW

SOUND-WING GABLE VIEW

Dept 15 m

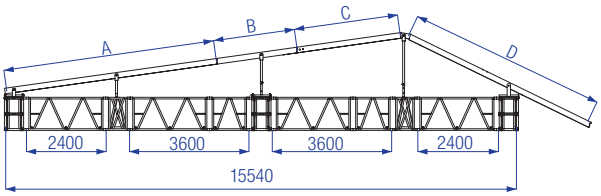

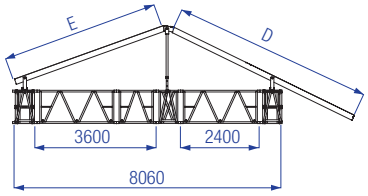

Dept 12 m

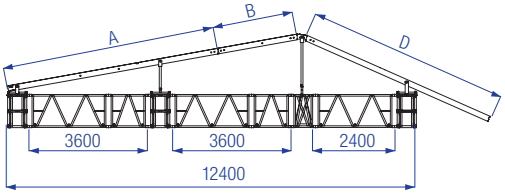

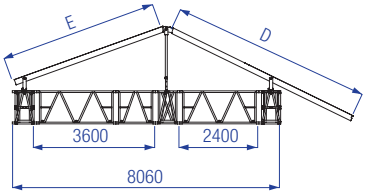

Dept 10 m

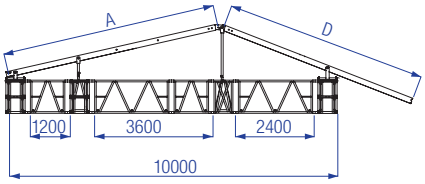

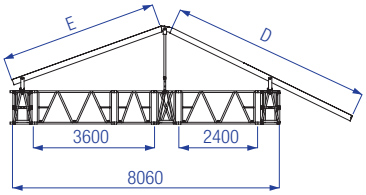

LT-ROOF SYSTEM

Gable measurements		A		B		C		D		E	
Dept 15 m	82'0" x 49'2"	6,48 m	21'3"	2,44 m	8'0"	3,17 m	10'4"	6,07 m	19'10"	4,78 m	15'8"
Dept 12 m	82'0" x 39'4"	6,48 m	21'3"	2,44 m	8'0"			6,07 m	19'10"	4,78 m	15'8"
Dept 10 m	82'0" x 32'9"	6,48 m	21'3"					6,07 m	19'10"	4,78 m	15'8"

Photo: Interstage, Project: Concert at Sea, The Netherlands

SYSTEM DESCRIPTION

The Space Roof is a modular roof system based on a space frame structure. The roof can be suspended from standard Prolyte CT towers. The aluminium profiles combine with special node points to create a roof structure of any desired size or shape. The Space Roof can be built up to 37 x 22 m in size. The specially designed top canopy guarantees efficient water drainage.
Due to the complexity and size of the Space Roof, quotations are made on request only, allowing us to match your requirements with the possibilities this system offers.

STRONG POINTS

- Modular roof system, modular sizes possible
- Extremely high load-bearing capacity
- Efficient transportation due to very compact transport volume (approx. 1/6th of a comparable truss roof)
- Integrated rigging points
- Safe and easy rigging access due to 2 m high frame and 8 cm wide profiles
- Measurements comply with standard scaffolding systems
- Stage sub-structure needs minimum amount of diagonals, allowing for easy creation of corridors underneath

BASIC STRUCTURE

Towers - C52T
Grid - Space frame

INCLUDING

- Tension gear and steel wires
- Structural report according to DIN 4112 / EN13814 C
- Ballast solution
- Rain gutter at front side

ROOF STRUCTURE	
Towers	C52T
Main grid	Space frame in a matrix size of 2072 x 2072 mm
TECHNICAL SPECIFICATIONS - Space Roof	
Dimensions	37 x 22m, 31 x 20m, 31 x 16m other sizes on request
Loading capacity (UDL)	max. 30000 kg
PA loads	Additional PA load near front tower 4000 kg per side
Total self weight	approx. 35000 kg (max. size)
Max. wind speed	36,9 m/second, 82,5 mph

OPTIONS	
Canopy	Top, sides and back
Canopy colour	Standard: outside grey, inside black (other colours possible)
Soundwings	Optional, not included
Ballast	90 Tons
Staging	Layher scaffolding stage combined with Probeam
ProLyft hoist 2000 kg	8-16 x PAE-1000DC-1235/PAE-1000LV-1235 + load cells, depending on size and version
Comprehensive building manual	yes

Photo: Starlight, Gothenburg

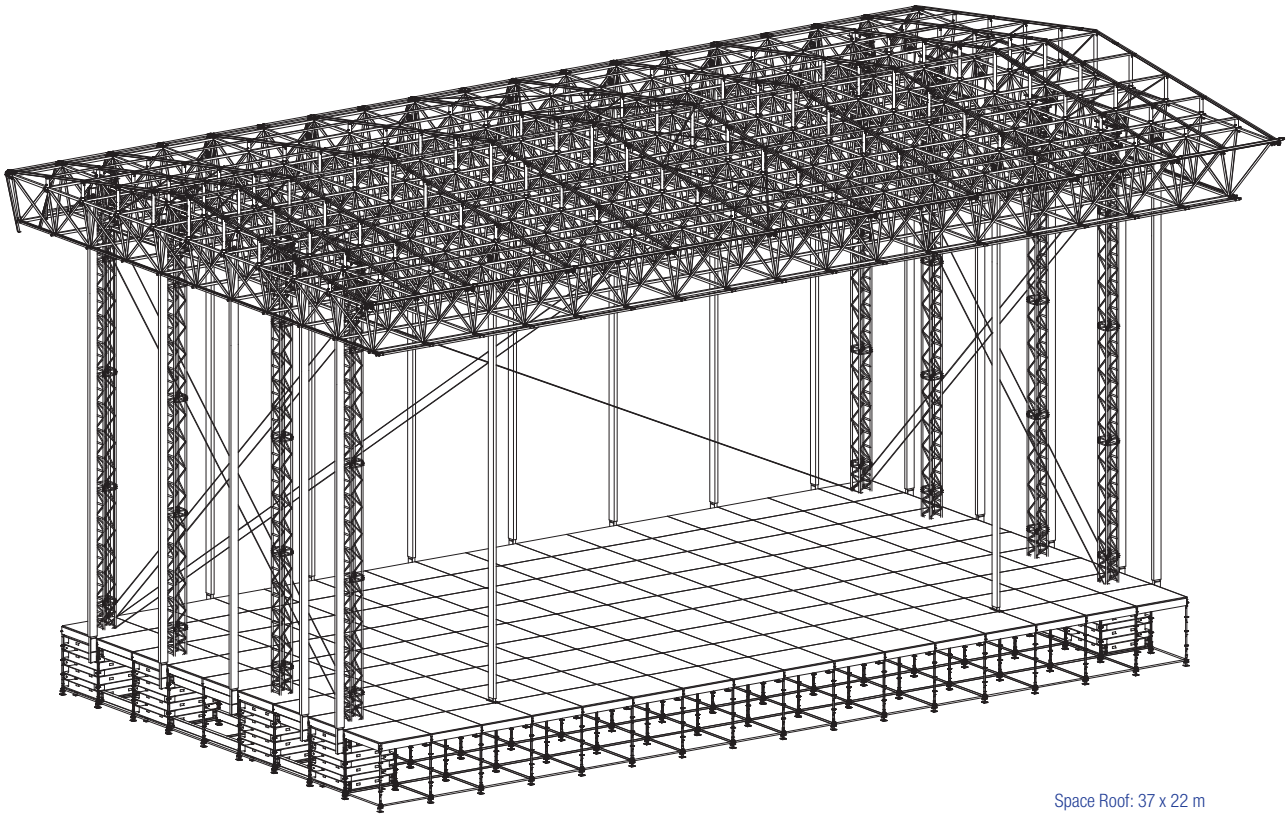

Space Roof: 37 x 22 m

Front view

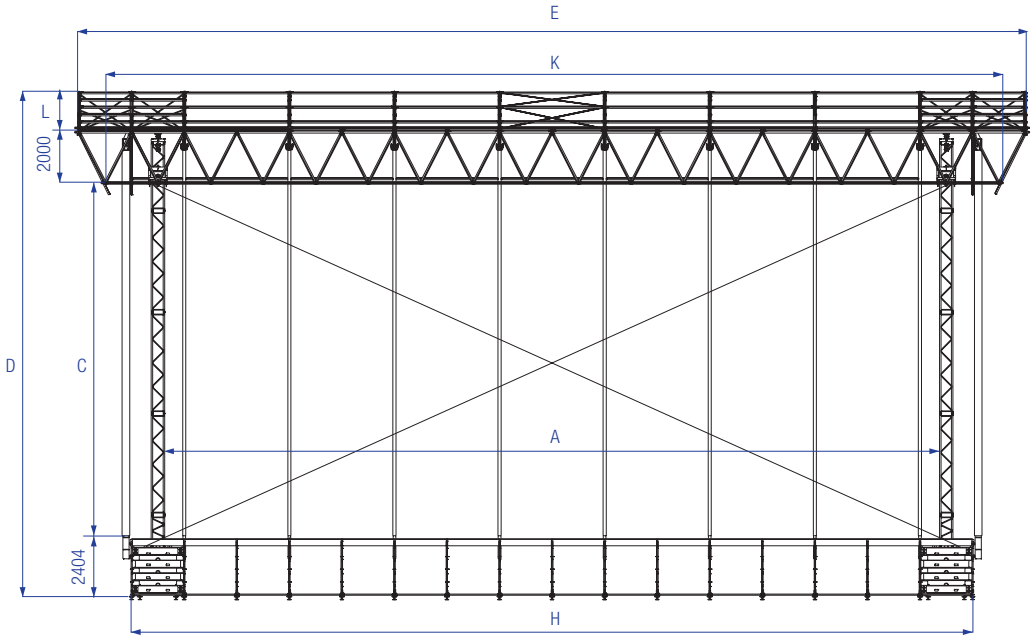

Side view

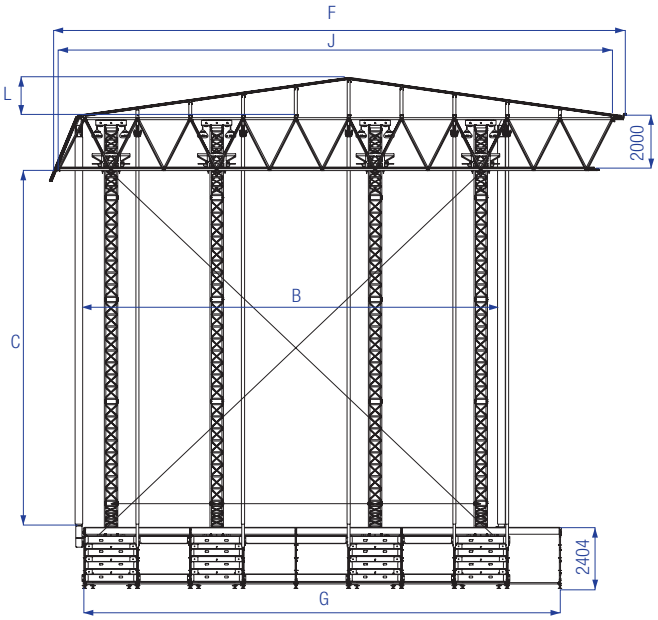

Space Roof SYSTEM		Inside						Overall					
Stage measurements		A		B		C		D		E		F	
37 x 22 m	121'4" x 72'2"	30,55 m	100'2"	16,59 m	54'4"	14,00 m	45'9"	20,06 m	65'8"	37,65 m	123'5"	22,62 m	74'2"
31 x 20 m	101'8" x 65'6"	24,33 m	79'8"	14,20 m	46'6"	10,00 m	32'8"	15,91 m	52'2"	31,44 m	103'1"	20,54 m	67'4"
31 x 16 m	101'8" x 52'5"	24,33 m	79'8"	10,06 m	33'0"	10,00 m	32'8"	15,91 m	52'2"	31,44 m	103'1"	16,40 m	53'8"

Top view

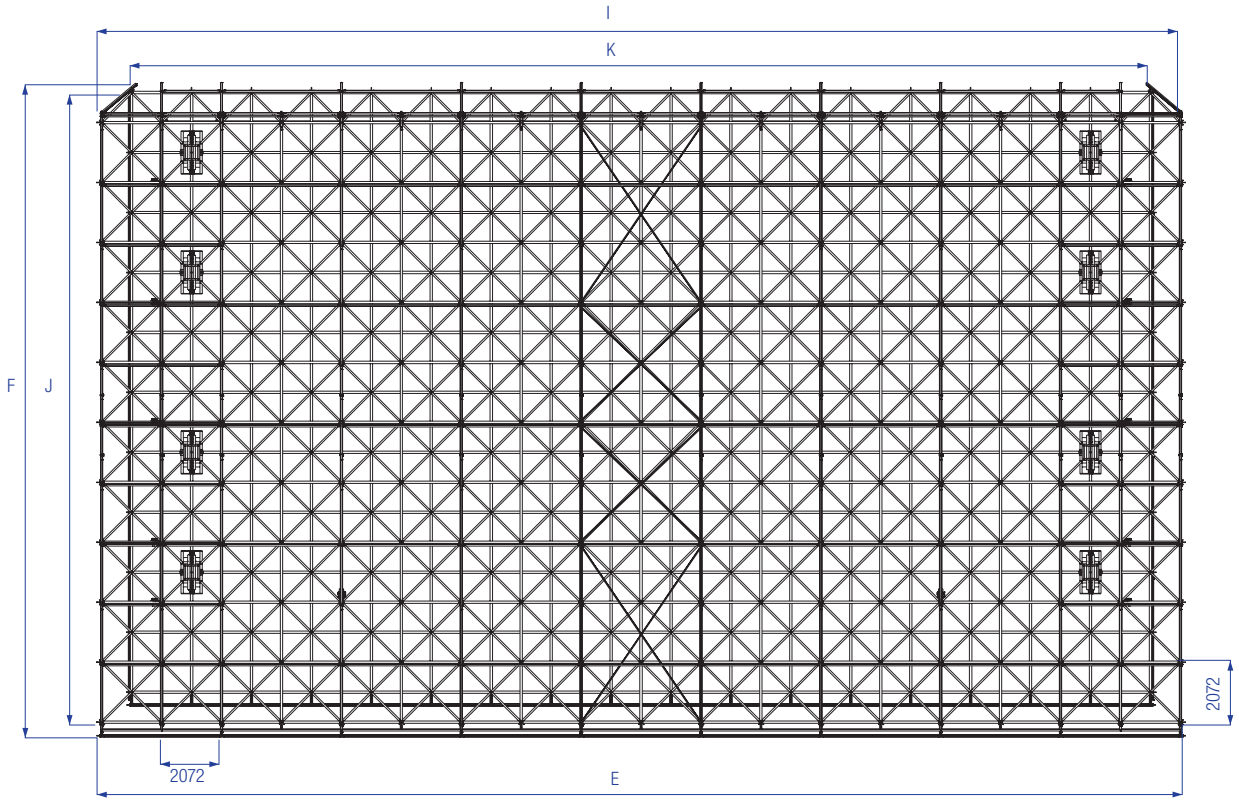

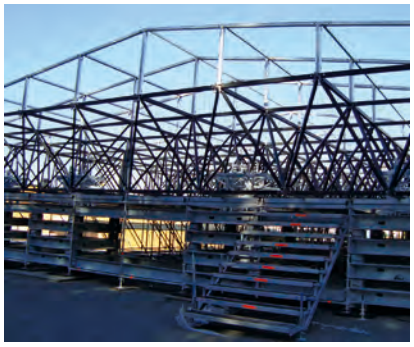

Space Roof SYSTEM		Floor				Grid						Pitch roof	
Stage measurements		G		H		I		J		K		L	
37 x 22 m	121'4" x 72'2"	18,65 m	61'2"	33,15 m	108'8"	37,30 m	122'4"	21,76 m	71'4"	35,22 m	115'6"	1,57 m	5,2"
31 x 20 m	101'8" x 65'6"	16,58 m	54'4"	26,94 m	88'4"	31,08 m	101'9"	19,68 m	64'6"	29,01 m	95'2"	1,43 m	4'7"
31 x 16 m	101'8" x 52'5"	12,43 m	40'8"	26,94 m	88'4"	31,08 m	101'9"	15,54 m	50'9"	29,01 m	95'2"	1,14 m	3'7"

PROLYTE STRUCTURES

ProlyteStructures encompasses trusses, complementary corners and accessories; all designed and manufactured according to a strict philosophy that emphasizes safety by making high quality products in compliance with the strictest regulations and standards. Simplicity, ease-of-use and configuration flexibility guarantee user-friendly products designed for daily practice. Prolyte provides comprehensive data and offers expert guidance and training to promote the correct use and safe application of its truss systems.

www.prolyte.com/prolytestructures

PROLYTE SYSTEMS

ProlyteSystems offer innovative, solidly engineered solutions for constructing complex structures or roof systems for any event. ProlyteSystems encompasses tower and roof structures, in a range that is suitable for intimate social gatherings to massive outdoor concerts. Prolyte systems are robust, stylish, and ready to work in any type of environment. Regardless of the size or demands of your application, with Prolyte you are asserted of a long-term solution next to a cost-efficient investment.

www.prolyte.com/prolytesystems

Safety is our driving force

Prolyte Group products comply with strict international standards and regulations. The manufacturing and welding of our products is a very precise and reliable process, we work exhaustively to ensure our procedures and protocols conform to applicable standards and endeavour to be one step ahead of new and future regulations and standards. All products are manufactured to EN1090-3 EXC3, the highest execution class, as certified by two independent notified bodies. All our loading tables and structural calculations are in compliance with EC9.

Prolyte Campus

Your safety is our priority. Creating awareness that safe working practices are key to responsible ownership is one of the goals Prolyte likes to achieve. To this end Prolyte started Prolyte Campus, an initiative to educate customers and end-users about the safe application of Prolyte products. Comprehensive product information, in house seminars at Prolyte distributors, regular blogs on technical topics and 'how-to' videos are brought to you under the umbrella of Prolyte Campus.
Prolyte initiates knowledge transfer and creates a dialogue with

STAGE DEX

Prolyte offers a complete product line for demountable stages, stage support frames and crowd control solutions under the brand name StageDex. StageDex offers reliable and strong constructions that adapt easily to your needs, in several product lines, like the LiteDeck or StageDex and a range of accessories.

www.prolyte.com/stagedex

PRO LYFT

ProLyft is the product line for hoists, lifting systems, drive and control solutions. When simplicity in motion is the ultimate goal, there's always a next level to meet. ProLyft invites you to take that level further with a product range that is fit to meet the future.

ProLyft offers controllers and chain hoists that are designed to meet the exacting demands of the entertainment market. These fool proof hoists and controllers will withstand rigorous transport and are easy to service

www.prolyte.com/prolyft

technicians worldwide, identifying their needs and sharing experiences, to help you grow your business.

Do you want to meet the Prolyte team or to attend a Prolyte Campus? Prolyte organises events in cooperation with its distributor network on a regular basis all around the globe.

www.prolyte.com/prolytecampus

PROLYTE CAMPUS

BlackBook

The ultimate reference guide for our industries riggers, trussing and staging technicians, the BlackBook offers renowned technical background information and practical tips and tricks. Completely up-to-date with the latest developments in regulations and product design, this book is a must read for all technicians in the live industry.

www.prolyte.com/brochures

Prolyte Group · salesnl@prolyte.com · +31 594 851 515